*ATTACHMENT A*

TABLE NO. II - PROPERTIES FOR TJI JOISTS

| BASIC PROPERTIES | | | | | | REACTION PROPERTIES | | | | | | | | | |
|---|---|---|---|---|---|---|---|---|---|---|---|---|---|---|---|
| | | | | | | END REACTION (lbs.) | | | | | INTERMEDIATE REACTION (lbs.) | | | | |
| | | | | | | 1-3/4" | | 3-1/2" | | | 3-1/2" | | 5-1/4" | | |
| | | | | | | Bearing Lgth. | | Bearing Lgth. | | | Bearing Lgth. | | Bearing Lgth. | | |
| | | | | | | Web Stiffeners | | Web Stiffeners | | | Web Stiffeners | | Web Stiffeners | | |
| JOIST DEPTH (in.) | JOIST WT. (plf) | RESISTIVE MOMENT (ft.-lbs.) | VERT. SHEAR (lbs.) | EI x $10^6$ in^2-lbs | K | NO | YES | NO | YES | NAILS REQ'D. | NO | YES | NO | YES | NAILS REQ'D. |
| **TJI/PRO-150** | | | | | | | | | | | | | | | |
| 9-1/2 | 1.9 | 2730 | 1120 | 160 | 4.5 | 945 | NA | 1120 | NA | NA | 1895 | NA | 2440 | NA | NA |
| 11-7/8 | 2.2 | 3620 | 1420 | 276 | 4.5 | 945 | NA | 1420 | NA | NA | 1895 | NA | 2440 | NA | NA |
| **TJI/PRO-250** | | | | | | | | | | | | | | | |
| 7-1/2 | 1.9 | 2335 | 860 | 103 | 4.5 | 860 | NA | 860 | NA | NA | 2030 | NA | 2225 | NA | NA |
| 9-1/2 | 2.1 | 3210 | 1120 | 185 | 4.5 | 1015 | NA | 1120 | NA | NA | 2030 | NA | 2575 | NA | NA |
| 11-7/8 | 2.4 | 4260 | 1420 | 319 | 4.5 | 1015 | 1120 | 1420 | 1420 | 3-8d | 2030 | 2385 | 2575 | 2930 | 3-8d |
| 14 | 2.6 | 5210 | 1710 | 474 | 4.5 | 1015 | 1120 | 1560 | 1710 | 5-8d | 2030 | 2480 | 2575 | 3170 | 5-8d |
| 16 | 2.9 | 6075 | 1970 | 653 | 4.5 | 1015 | 1120 | 1560 | 1970 | 6-8d | 2030 | 2480 | 2575 | 3290 | 6-8d |
| **TJI/PRO-350** | | | | | | | | | | | | | | | |
| 9-1/2 | 2.5 | 3745 | 1120 | 231 | 4.5 | 1120 | NA | 1120 | NA | NA | 2320 | NA | 2870 | NA | NA |
| 10 | 2.6 | 4010 | 1185 | 261 | 4.5 | 1160 | 1185 | 1185 | 1185 | 3-8d | 2320 | 2680 | 2870 | 3065 | 3-8d |
| 11-7/8 | 2.8 | 5000 | 1420 | 395 | 4.5 | 1160 | 1420 | 1420 | 1420 | 3-8d | 2320 | 2680 | 2870 | 3225 | 3-8d |
| 14 | 3.0 | 6135 | 1710 | 584 | 4.5 | 1160 | 1505 | 1615 | 1710 | 5-8d | 2320 | 2915 | 2870 | 3465 | 5-8d |
| 16 | 3.3 | 7205 | 1970 | 801 | 4.5 | 1160 | 1505 | 1615 | 1970 | 6-8d | 2320 | 3035 | 2870 | 3580 | 6-8d |
| 18 | 3.5 | 8000 | 2155 | 1055 | 4.5 | 1160 | 1505 | 1615 | 2155 | 7-8d | 2320 | 3155 | 2870 | 3700 | 7-8d |
| 20 | 3.7 | 9040 | 2165 | 1354 | 4.5 | 1160 | 1505 | 1615 | 2165 | 8-8d | 2320 | 3275 | 2870 | 3820 | 8-8d |
| **TJI/PRO-550** | | | | | | | | | | | | | | | |
| 10 | 3.4 | 6150 | 1720 | 394 | 5.3 | 1400 | 1715 | 1720 | 1720 | 2-16d | 3355 | 3670 | 3970 | 4285 | 2-16d |
| 11-7/8 | 3.6 | 7675 | 1925 | 593 | 5.3 | 1400 | 1715 | 1885 | 1925 | 2-16d | 3355 | 3670 | 3970 | 4285 | 2-16d |
| 14 | 3.9 | 9420 | 2125 | 874 | 5.3 | 1400 | 1875 | 1885 | 2125 | 3-16d | 3355 | 3830 | 3970 | 4445 | 3-16d |
| 16 | 4.1 | 11065 | 2330 | 1192 | 5.3 | 1400 | 2030 | 1885 | 2330 | 4-16d | 3355 | 3985 | 3970 | 4605 | 4-16d |
| **TJI/L60** | | | | | | | | | | | | | | | |
| 16 | 3.3 | 8015 | 2330 | 847 | 5.3 | 1315 | 1505 | 1885 | 2330 | 6-8d | 2625 | 3330 | 3245 | 3990 | 6-8d |
| 18 | 3.5 | 8825 | 2535 | 1119 | 5.3 | 1315 | 1505 | 1885 | 2535 | 7-8d | 2625 | 3330 | 3245 | 4115 | 7-8d |
| 20 | 3.7 | 9905 | 2740 | 1437 | 5.3 | NA | 1505 | NA | 2740 | 8-8d | NA | 3330 | NA | 4235 | 8-8d |
| 22 | 3.9 | 10985 | 2935 | 1801 | 5.3 | NA | 1505 | NA | 2935 | 9-8d | NA | 3330 | NA | 4360 | 9-8d |
| 24 | 4.2 | 11635 | 3060 | 2214 | 5.3 | NA | 1505 | NA | 3010 | 10-8d | NA | 3330 | NA | 4485 | 10-8d |
| 26 | 4.4 | 12680 | 2900 | 2670 | 5.3 | NA | 1505 | NA | 2900 | 11-8d | NA | [illegible] | NA | [illegible] | 11-8d |
| 28 | 4.6 | 13725 | 2900 | 3196 | 5.3 | NA | 1505 | NA | 2900 | 12-8d | NA | [illegible] | NA | [illegible] | 12-8d |
| 30 | 4.9 | 14770 | 2900 | 3769 | 5.3 | NA | 1505 | NA | 2900 | 13-8d | NA | [illegible] | NA | [illegible] | 13-8d |
| **TJI/L90** | | | | | | | | | | | | | | | |
| 16 | 4.1 | 12425 | 2330 | 1246 | 5.3 | 1400 | 2030 | 1885 | 2330 | 4-16d | 3355 | 3985 | 3970 | 4605 | 4-16d |
| 18 | 4.3 | 13680 | 2535 | 1635 | 5.3 | 1400 | 2030 | 1885 | 2515 | 4-16d | 3355 | 3985 | 3970 | 4605 | 4-16d |
| 20 | 4.6 | 15360 | 2740 | 2085 | 5.3 | NA | 2190 | NA | 2675 | 5-16d | NA | 4145 | NA | 4760 | 5-16d |
| 22 | 4.8 | 17040 | 2935 | 2597 | 5.3 | NA | 2345 | NA | 2830 | 6-16d | NA | 5090 | NA | 5710 | 11-16d |
| 24 | 5.0 | 18060 | 3060 | 3172 | 5.3 | NA | 2345 | NA | 2830 | 6-16d | NA | 5195 | NA | 6025 | 13-16d |
| 26 | 5.3 | 19680 | 2900 | 3814 | 5.3 | NA | 2345 | NA | 2900 | 7-16d | NA | [illegible] | NA | [illegible] | 14-16d |
| 28 | 5.5 | 21300 | 2900 | 4525 | 5.3 | NA | 2345 | NA | 2900 | 8-16d | NA | [illegible] | NA | [illegible] | 15-16d |
| 30 | 5.8 | 22925 | 2900 | 5306 | 5.3 | NA | 2345 | NA | 2900 | 8-16d | NA | [illegible] | NA | [illegible] | 17-16d |
| **TJI/H60** | | | | | | | | | | | | | | | |
| 10 | 2.9 | 5000 | 1720 | 300 | 5.3 | 1400 | 1505 | 1720 | 1720 | 3-8d | 3335 | 3335 | 4090 | 4450 | 3-8d |
| 11-7/8 | 3.2 | 6260 | 1925 | 456 | 5.3 | 1400 | 1505 | 1885 | 1925 | 3-8d | 3335 | 3335 | 4090 | 4460 | 3-8d |
| 14 | 3.5 | 7695 | 2125 | 679 | 5.3 | 1400 | 1505 | 1885 | 2125 | 5-8d | 3335 | 3335 | 4090 | 4710 | 5-8d |
| 16 | 3.7 | 9055 | 2330 | 934 | 5.3 | 1400 | 1505 | 1885 | 2330 | 6-8d | 3335 | 3335 | 4090 | 4830 | 6-8d |
| 18 | 4.0 | 10070 | 2535 | 1236 | 5.3 | 1400 | 1505 | 1885 | 2535 | 7-8d | 3335 | 3335 | 4090 | 4840 | 7-8d |
| 20 | 4.3 | 11340 | 2740 | 1587 | 5.3 | NA | 1505 | NA | 2740 | 8-8d | NA | 3335 | NA | 4840 | 8-8d |
| 22 | 4.5 | 12590 | 2935 | 1989 | 5.3 | NA | 1505 | NA | 2935 | 9-8d | NA | 3335 | NA | 4840 | 9-8d |
| 24 | 4.8 | 13350 | 3060 | 2444 | 5.3 | NA | 1505 | NA | 3010 | 10-8d | NA | 3335 | NA | 4840 | 10-8d |
| 26 | 5.1 | 14555 | 2900 | 2955 | 5.3 | NA | 1505 | NA | 2900 | 11-8d | NA | [illegible] | NA | [illegible] | 11-8d |
| 28 | 5.3 | 15760 | 2900 | 3523 | 5.3 | NA | 1505 | NA | 2900 | 12-8d | NA | [illegible] | NA | [illegible] | 12-8d |
| 30 | 5.6 | 16965 | 2900 | 4151 | 5.3 | NA | 1505 | NA | 2900 | 13-8d | NA | [illegible] | NA | [illegible] | 13-8d |
| **TJI/H90** | | | | | | | | | | | | | | | |
| 10 | 3.8 | 7760 | 1720 | 453 | 5.3 | 1400 | 1715 | 1720 | 1720 | 2-16d | 3495 | 3810 | 4100 | 4420 | 2-16d |
| 11-7/8 | 4.1 | 9730 | 1925 | 687 | 5.3 | 1400 | 1715 | 1885 | 1925 | 2-16d | 3495 | 3810 | 4100 | 4420 | 2-16d |
| 14 | 4.3 | 11975 | 2125 | 1015 | 5.3 | 1400 | 1875 | 1885 | 2125 | 3-16d | 3495 | 3970 | 4100 | 4575 | 3-16d |
| 16 | 4.6 | 14100 | 2330 | 1389 | 5.3 | 1400 | 2030 | 1885 | 2330 | 4-16d | 3495 | 4130 | 4100 | 4735 | 4-16d |
| 18 | 4.8 | 15685 | 2535 | 1827 | 5.3 | 1400 | 2030 | 1885 | 2515 | 4-16d | 3495 | 4130 | 4100 | 4735 | 4-16d |
| 20 | 5.1 | 17670 | 2740 | 2331 | 5.3 | NA | 2190 | NA | 2675 | 5-16d | NA | 4285 | NA | 4890 | 5-16d |
| 22 | 5.3 | 19625 | 2935 | 2904 | 5.3 | NA | 2345 | NA | 2830 | 6-16d | NA | 5195 | NA | 5840 | 11-16d |
| 24 | 5.6 | 20810 | 3060 | 3549 | 5.3 | NA | 2345 | NA | 2830 | 6-16d | NA | 5195 | NA | 6155 | 13-16d |
| 26 | 5.8 | 22695 | 2900 | 4266 | 5.3 | NA | 2345 | NA | 2900 | 7-16d | NA | [illegible] | NA | [illegible] | 14-16d |
| 28 | 6.1 | 24580 | 2900 | 5059 | 5.3 | NA | 2345 | NA | 2900 | 8-16d | NA | [illegible] | NA | [illegible] | 15-16d |
| 30 | 6.3 | 26465 | 2900 | 5930 | 5.3 | NA | 2345 | NA | 2900 | 8-16d | NA | [illegible] | NA | [illegible] | 17-16d |
| **TJI/Pro-120TS** | | | | | | | | | | | | | | | |
| 9-1/2 | 2.4 | 2570 | 1120 | 141 | 4.5 | 1120 | NA | 1120 | NA | NA | 2480 | NA | 2900 | NA | NA |
| 11-7/8 | 2.7 | 3430 | 1420 | 246 | 4.5 | 1120 | NA | 1420 | NA | NA | 2480 | NA | 3475 | NA | NA |
| **TJI/Pro-150TS** | | | | | | | | | | | | | | | |
| 9-1/2 | 2.6 | 2730 | 1120 | 160 | 4.5 | 1120 | NA | 1120 | NA | NA | 2870 | NA | 2900 | NA | NA |
| 11-7/8 | 2.9 | 3620 | 1420 | 276 | 4.5 | 1200 | NA | 1420 | NA | NA | 2870 | NA | 3515 | NA | NA |

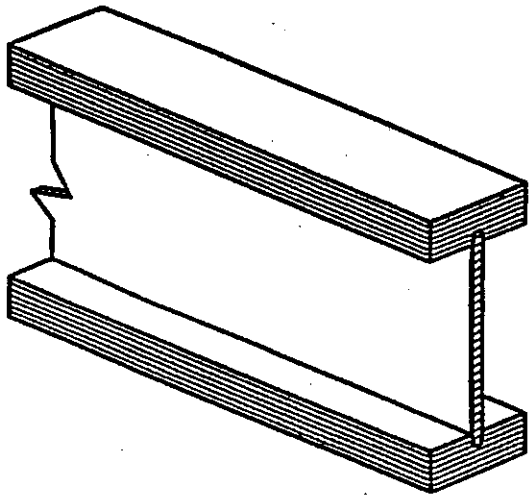

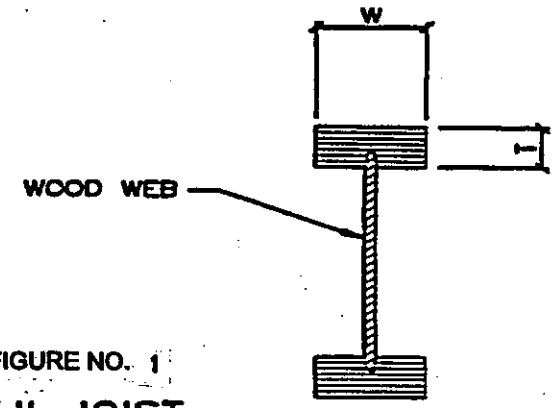


FIGURE NO. 1

TJI JOIST

**Table No. I - Joist Description**

| Joist Series | Flange Grade | | Flange Size (inches) | | Range of Joist Depth (inches) |
|---|---|---|---|---|---|
| 1. Performance Plus OSB Web TJI Joists | | | | | |
| | | | | | |
| TJI®/Pro-150 | (1) | 2.1 | 1.5 x 1.50 | 3/8 | 9 1/2 - 11 7/8 |
| TJI®/Pro-250 | (1) | 2.1 | 1.5 x 1.75 | 3/8 | 7 1/2 - 16 |
| TJI®/Pro-350 | (1) | 2.0 | 1.5 x 2.30 | 3/8 | 9 1/2 - 20 |
| TJI®/Pro-550 | (1) | 2.0 | 1.5 x 3.50 | 7/16 | 10 - 30 |
| TJI®/Pro-120TS | (2) | 1.55 | 1.5 x 1.75 | 3/8 | 9 1/2 - 11 7/8 |
| TJI®/Pro-150TS | (2) | 1.55 | 1.5 x 2.00 | 3/8 | 9 1/2 - 11 7/8 |
| | | | | | |
| TJI®/L60 | (1) | 2.1 | 1.5 x 2.30 | 7/16 | 16 - 30 |
| TJI®/H60 | (1) | 2.1 | 1.75 x 2.30 | 7/16 | 10 - 30 |
| TJI®/L90 | (1) | 2.1 | 1.5 x 3.50 | 7/16 | 16 - 30 |
| TJI®/H90 | (1) | 2.1 | 1.75 x 3.50 | 7/16 | 10 - 30 |
| | | | | | |
| 2. Plywood Web TJI® Joists | | | | | |
| | | | | | |
| TJI®/Pro-25P & TJI/L45P | (1) | 2.1 | 1.5 x 1.75 | 3/8 | 7 1/2 - 16 |
| TJI®/Pro-35P | (1) | 2.1 | 1.5 x 2.30 | 3/8 | 10 - 20 |
| TJI®/Pro-350P & TJI/L60P | (1) | 2.1 | 1.5 x 2.30 | 15/32 | 10 - 30 |
| TJI®/Pro-550P & TJI/L90P | (1) | 2.1 | 1.5 x 3.50 | 15/32 | 10 - 30 |
| TJI®/H60P | (1) | 2.1 | 1.75 x 2.30 | 15/32 | 10 -30 |
| TJI®/H90P | (1) | 2.1 | 1.75 x 3.50 | 15/32 | 10 - 30 |

(1) = Microllam® LVL
(2) = TimberStrand® LSL

FIGURE NO. 2
WEB STIFFENER NOTES AND DETAILS

1. Web stiffeners shall be installed at bearing points as required in Table No. II.

2. Web stiffeners shall be installed at points of concentrated loads greater than 1500 pounds and are to be nailed in accordance with the intermediate reaction schedule in Table No. II.

3. Web stiffeners are to be installed on each side of the web as shown, with nails equally spaced vertically.

4. A gap shall be left at the top of web stiffeners as shown at all bearing conditions. In the case of concentrated loads, web stiffeners are required as shown and the gap shall be at the bottom.

5. Web stiffener material shall be sheathing meeting the requirements of PS1 or PRP108d with the face grain parallel to the long axis.

6. Some hangers require web stiffeners to comply with nailing requirements through side plates.

7. If web stiffeners are not used in hanger support, the side of the hanger shall extend up to laterally support the top flange.

Web stiffener specifications are as follows:

| Joist Series | Minimum Dimensions | | Grade |
|---|---|---|---|
| | "W" (Inches) | "T" (Inches) | |
| TJI/Pro-150 | 2 5/16 | 1/2 | See Note 5 |
| TJI/Pro-250/Pro-120TS/Pro-25P/L45P | 2 5/16 | 5/8 | See Note 5 |
| TJI/150TS | 2 5/16 | 3/4 | See Note 5 |
| TJI/Pro-350/L60/H60/Pro-35P/Pro-350P/L60P/H60P | 2 5/16 | 7/8 | See Note 5 |
| TJI/Pro-550/L90/H90/Pro-550P/L90P/H90P | 3 1/2 | 1 1/2 | Construction Grade 2x4 |

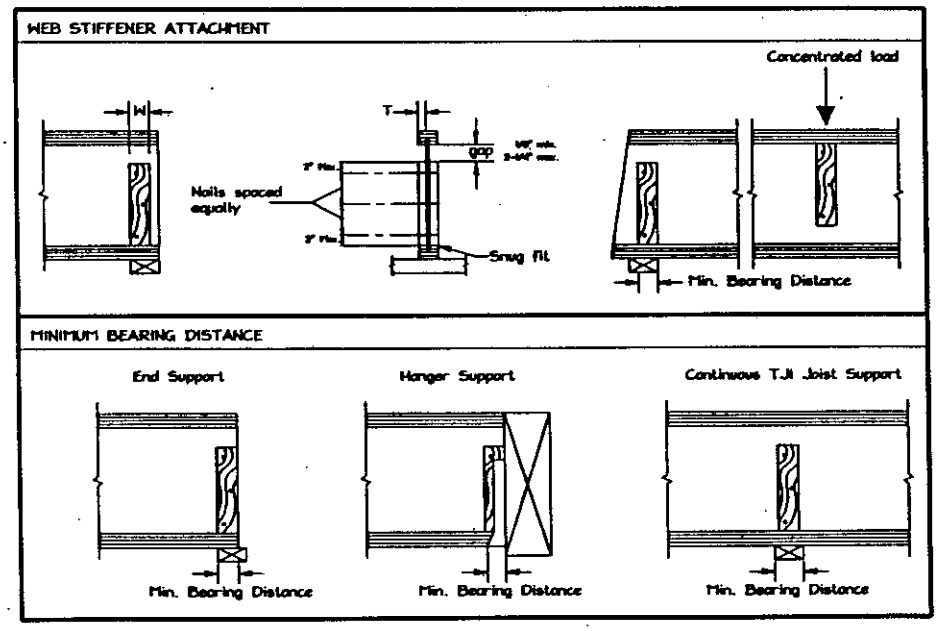

TABLE NO. II - CONTINUED-

| BASIC PROPERTIES | | | | | | REACTION PROPERTIES | | | | | | | | | |
|---|---|---|---|---|---|---|---|---|---|---|---|---|---|---|---|
| JOIST DEPTH (in.) | JOIST WT. (plf) | NEGATIVE MOMENT (ft.-lbs.) | VERT. SHEAR (lbs.) | EI x $10^6$ in^2-lbs | K | END REACTION (lbs.) | | | | NAILS REQ'D. | INTERMEDIATE REACTION (lbs.) | | | | NAILS REQ'D. |
| | | | | | | 1-3/4" | | 3-1/2" | | | 3-1/2" | | 5-1/4" | | |
| | | | | | | Bearing Lgth. | | Bearing Lgth. | | | Bearing Lgth. | | Bearing Lgth. | | |
| | | | | | | Web Stiffeners | | Web Stiffeners | | | Web Stiffeners | | Web Stiffeners | | |
| | | | | | | NO | YES | NO | YES | | NO | YES | NO | YES | |
| TJI/25P, TJI/L45P | | | | | | | | | | | | | | | |
| 7-1/2 | 1.8 | 2330 | 640 | 100 | 2.7 | 640 | NA | 640 | NA | NA | 1655 | NA | 1655 | NA | NA |
| 9-1/2 | 1.9 | 3200 | 805 | 177 | 2.7 | 805 | NA | 805 | NA | NA | 1905 | NA | 2085 | NA | NA |
| 11-7/8 | 2.0 | 4245 | 990 | 300 | 2.7 | 950 | 990 | 990 | 990 | 3-8d | 1905 | 2260 | 2415 | 2560 | 3-8d |
| 14 | 2.2 | 5190 | 1160 | 440 | 2.7 | 950 | 1120 | 1160 | 1160 | 5-8d | 1905 | 2480 | 2415 | 2730 | 5-8d |
| 16 | 2.4 | 6055 | 1315 | 598 | 2.7 | 950 | 1120 | 1315 | 1315 | 6-8d | 1905 | 2480 | 2415 | 3095 | 6-8d |
| TJI/35P | | | | | | | | | | | | | | | |
| 10 | 2.5 | 4555 | 845 | 263 | 2.7 | 845 | NA | 845 | NA | NA | 2180 | NA | 2185 | NA | NA |
| 11-7/8 | 2.6 | 5660 | 1000 | 394 | 2.7 | 1000 | 1000 | 1000 | 1000 | 3-8d | 2180 | 2540 | 2590 | 2590 | 3-8d |
| 14 | 2.8 | 6920 | 1160 | 576 | 2.7 | 1090 | 1160 | 1160 | 1160 | 5-8d | 2180 | 2730 | 2695 | 2730 | 5-8d |
| 16 | 3.0 | 8075 | 1315 | 781 | 2.7 | 1090 | 1315 | 1315 | 1315 | 6-8d | 2180 | 2895 | 2695 | 3095 | 6-8d |
| 18 | 3.1 | 8890 | 1470 | 1020 | 2.7 | NA | 1470 | NA | 1470 | 7-8d | NA | 2940 | NA | 2940 | 7-8d |
| 20 | 3.3 | 9980 | 1625 | 1293 | 2.7 | NA | 1505 | NA | 1625 | 8-8d | NA | 3135 | NA | 3250 | 8-8d |
| TJI/350P, TJI/L60P | | | | | | | | | | | | | | | |
| 10 | 2.7 | 4515 | 1215 | 267 | 3.4 | 1215 | 1215 | 1215 | 1215 | 3-8d | 2450 | 2830 | 3025 | 3145 | 3-8d |
| 11-7/8 | 2.9 | 5610 | 1420 | 402 | 3.4 | 1224 | 1420 | 1420 | 1420 | 3-8d | 2450 | 2830 | 3025 | 3405 | 3-8d |
| 14 | 3.2 | 6855 | 1625 | 591 | 3.4 | 1225 | 1505 | 1625 | 1625 | 5-8d | 2450 | 3085 | 3025 | 3660 | 5-8d |
| 16 | 3.4 | 7995 | 1830 | 806 | 3.4 | 1225 | 1505 | 1800 | 1830 | 6-8D | 2450 | 3210 | 3025 | 3785 | 6-8d |
| 18 | 3.6 | 8805 | 2030 | 1058 | 3.4 | 1225 | 1505 | 1800 | 2030 | 7-8d | 2450 | 3330 | 3025 | 3915 | 7-8d |
| 20 | 3.9 | 9880 | 2235 | 1349 | 3.4 | NA | 1505 | NA | 2235 | 8-8d | NA | 3330 | NA | 4040 | 8-8d |
| 22 | 4.1 | 10960 | 2440 | 1680 | 3.4 | NA | 1505 | NA | 2440 | 9-8d | NA | 3330 | NA | 4165 | 9-8d |
| 24 | 4.4 | 11610 | 2645 | 2052 | 3.4 | NA | 1505 | NA | 2645 | 10-8d | NA | 3330 | NA | 4295 | 10-8d |
| 26 | 4.6 | 12650 | 2775 | 2468 | 3.4 | NA | 1505 | NA | 2775 | 11-8d | NA | [illegible] | NA | [illegible] | 11-8d |
| 28 | 4.9 | 13690 | 2900 | 2928 | 3.4 | NA | 1505 | NA | 2900 | 12-8d | NA | [illegible] | NA | [illegible] | 12-8d |
| 30 | 5.1 | 14735 | 2900 | 3434 | 3.4 | NA | 1505 | NA | 2900 | 13-8d | NA | [illegible] | NA | [illegible] | 13-8d |
| TJI/360P | | | | | | | | | | | | | | | |
| 10 | 3.0 | 4985 | 1380 | 292 | 3.4 | 1380 | 1380 | 1380 | 1380 | 3-8d | 3070 | 3335 | 3570 | 3570 | 3-8d |
| 11-7/8 | 3.2 | 6240 | 1575 | 442 | 3.4 | 1500 | 1505 | 1575 | 1575 | 3-8d | 3070 | 3335 | 3735 | 4075 | 3-8d |
| 14 | 3.4 | 7675 | 1770 | 653 | 3.4 | 1500 | 1505 | 1770 | 1770 | 5-8d | 3070 | 3335 | 3735 | 4165 | 5-8d |
| 16 | 3.6 | 9030 | 1970 | 893 | 3.4 | 1500 | 1505 | 1970 | 1970 | 6-8d | 3070 | 3335 | 3735 | 4495 | 6-8d |
| 18 | 3.8 | 10040 | 2165 | 1175 | 3.4 | 1500 | 1505 | 2020 | 2165 | 7-8d | 3070 | 3335 | 3735 | 4622 | 7-8d |
| 20 | 4.1 | 11305 | 2360 | 1499 | 3.4 | NA | 1505 | NA | 2360 | 8-8d | NA | 3335 | NA | 4750 | 8-8d |
| 22 | 4.3 | 12550 | 2555 | 1868 | 3.4 | NA | 1505 | NA | 2555 | 9-8d | NA | 3335 | NA | 4840 | 9-8d |
| 24 | 4.6 | 13310 | 2750 | 2283 | 3.4 | NA | 1505 | NA | 2750 | 10-8d | NA | 3335 | NA | 4840 | 10-8d |
| 26 | 4.8 | 14510 | 2950 | 2745 | 3.4 | NA | 1505 | NA | 2950 | 11-8d | NA | [illegible] | NA | [illegible] | 11-8d |
| 28 | 5.1 | 15710 | 3030 | 3255 | 3.4 | NA | 1505 | NA | 3010 | 12-8d | NA | [illegible] | NA | [illegible] | 12-8d |
| 30 | 5.3 | 16915 | 3115 | 3816 | 3.4 | NA | 1505 | NA | 3010 | 13-8d | NA | [illegible] | NA | [illegible] | 13-8d |
| TJI/550P, TJI/L80P | | | | | | | | | | | | | | | |
| 10 | 3.3 | 6990 | 1380 | 405 | 3.4 | 1380 | 1380 | 1380 | 1380 | 2-16d | 3125 | 3450 | 3570 | 3570 | 2-16d |
| 11-7/8 | 3.6 | 8690 | 1575 | 607 | 3.4 | 1500 | 1575 | 1575 | 1575 | 2-16d | 3125 | 3450 | 3700 | 4025 | 2-16d |
| 14 | 3.8 | 10630 | 1770 | 887 | 3.4 | 1500 | 1770 | 1770 | 1770 | 3-16d | 3125 | 3610 | 3700 | 4165 | 3-16d |
| 16 | 4.1 | 12405 | 1970 | 1204 | 3.4 | 1500 | 1970 | 1970 | 1970 | 4-16d | 3125 | 3770 | 3700 | 4345 | 4-16d |
| 18 | 4.4 | 13660 | 2165 | 1574 | 3.4 | 1500 | 2140 | 2020 | 2165 | 4-16d | 3125 | 3770 | 3700 | 4345 | 4-16d |
| 20 | 4.6 | 15340 | 2360 | 1997 | 3.4 | NA | 2305 | NA | 2360 | 5-16d | NA | 3930 | NA | 4505 | 5-16d |
| 22 | 4.9 | 17015 | 2555 | 2475 | 3.4 | NA | 2345 | NA | 2555 | 6-16d | NA | 4895 | NA | 5470 | 11-16d |
| 24 | 5.1 | 18030 | 2750 | 3011 | 3.4 | NA | 2345 | NA | 2750 | 6-16d | NA | 5195 | NA | 5795 | 13-16d |
| 26 | 5.4 | 19630 | 2950 | 3604 | 3.4 | NA | 2345 | NA | 2950 | 7-16d | NA | [illegible] | NA | [illegible] | 14-16d |
| TJI/890P | | | | | | | | | | | | | | | |
| 10 | 3.8 | 7750 | 1380 | 446 | 3.4 | 1380 | 1380 | 1380 | 1380 | 2-16d | 3570 | 3570 | 3570 | 3570 | 2-16d |
| 11-7/8 | 4.0 | 9710 | 1575 | 673 | 3.4 | 1500 | 1575 | 1575 | 1575 | 2-16d | 3745 | 4070 | 4075 | 4075 | 2-16d |
| 14 | 4.2 | 11955 | 1770 | 990 | 3.4 | 1500 | 1770 | 1770 | 1770 | 3-16d | 3745 | 4165 | 4165 | 4165 | 3-16d |
| 16 | 4.4 | 14075 | 1970 | 1348 | 3.4 | 1500 | 1970 | 1970 | 1970 | 4-16d | 3745 | 4390 | 4395 | 4635 | 4-16d |
| 18 | 4.7 | 15655 | 2165 | 1765 | 3.4 | 1500 | 2140 | 2020 | 2165 | 4-16d | 3745 | 4390 | 4395 | 5040 | 4-16d |
| 20 | 4.9 | 17640 | 2360 | 2243 | 3.4 | NA | 2305 | NA | 2360 | 5-16d | NA | 4551 | NA | 5200 | 5-16d |
| 22 | 5.1 | 19585 | 2555 | 2783 | 3.4 | NA | 2345 | NA | 2555 | 6-16d | NA | 5195 | NA | 6010 | 11-16d |
| 24 | 5.4 | 20770 | 2750 | 3387 | 3.4 | NA | 2345 | NA | 2750 | 6-16d | NA | 5195 | NA | 6470 | 13-16d |
| 26 | 5.6 | 22650 | 2950 | 4056 | 3.4 | NA | 2345 | NA | 2950 | 7-16d | NA | [illegible] | NA | [illegible] | 14-16d |
| 28 | 5.8 | 24535 | 3030 | 4792 | 3.4 | NA | 2345 | NA | 3030 | 8-16d | NA | [illegible] | NA | [illegible] | 15-16d |
| 30 | 6.0 | 26415 | 3115 | 5595 | 3.4 | NA | 2345 | NA | 3115 | 8-16d | NA | [illegible] | NA | [illegible] | 17-16d |

Where:

R is the percent reduction

W in PLF is uniform load

$K = V_{12}/100$

$V_{12}$ is the allowable shear for a 12 inch (or 11-7/8) joist

By series, the constants are:

| Joist Series | Joist Depth (in.) | $V_{12}$ | K |
|---|---|---|---|
| TJI/Pro-150/250 | ≤11 7/8 | 1420 | 14.2 |
| TJI/Pro-350/Pro-120TS/Pro-150TS /PRO25P/L45P/PRO35P | ≤16<br>≤16 | 1420<br>990 | 14.2<br>9.9 |
| TJI/Pro-550/L60/H60/L90/H90 /Pro-350P/L60P | ≤24<br>≤24 | 1925<br>1420 | 19.25<br>14.2 |
| TJI/Pro-550P/L90P/H60P/H90P | ≤24 | 1575 | 15.75 |

(1) The calculated reduction R applies to depths equal to or less than depth shown.

9. The design shear of multiple span member joists, which have depths no greater than 12 inches and support live loads no greater than 40 psf, is permitted to be increased an additional 10 percent.

## General Footnotes

1. Figure No. 2 provides web stiffener details that are required for joist installation.

2. Deflection is calculated as follows:

Uniform Load: $$D = \frac{5WL^4}{384EI} + \frac{WL^2}{Kd\,x\,10^5}$$

Concentrated load to mid span:

$$\Delta = \frac{PL^3}{48EI} + \frac{2PL}{Kd\,x\,10^5}$$

Where:

| | |
|---|---|
| P | = Concentrated load. |
| W | = Uniform load in pounds per lineal inch. |
| L | = Clear span in inches. |
| d | = Cut-to-out depth of joist, in inches. |
| EI | = From Table No. II. |
| K | = Stiffness coefficient provided in Table No. II. |

3. The allowable design values are for normal duration of load and are permitted to be increased for duration as permitted by the code.

4. Allowable design reactions are permitted to be interpolated within the range of bearing lengths and depths shown.

5. When approved by the building official, the minimum bearing length is permitted to be reduced for joists supported by hangers if supplemental nail attachment is provided to the web stiffener.

6. Bearing stress of the supporting member cannot exceed allowable stresses recognized in the code or a current evaluation report.

7. Shaded areas indicate 5-1/4 inch or 7 inch bearing lengths at intermediate reactions.

8. When joists are used as multiple span members, the design shear is the calculated shear at the interior support reduced by the following:

$$R = W/K \leq 18\%$$