DOE/CE-0389T

A-2

The Department of Energy District Heating and Cooling Program A Decade (1982-1992) of Accomplishments

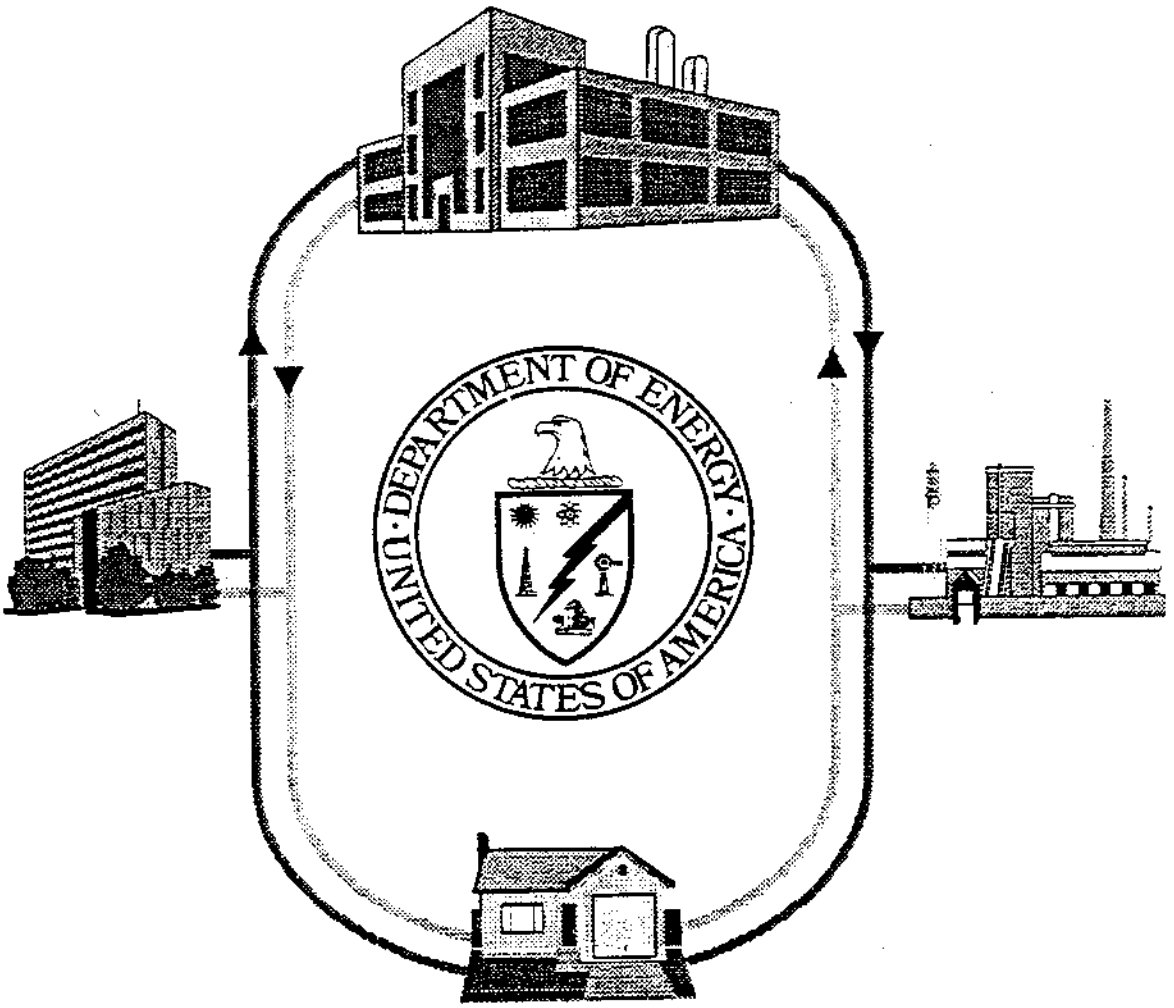

THE DEPARTMENT OF ENERGY
DISTRICT HEATING AND COOLING PROGRAM
A DECADE (1982-1992) OF ACCOMPLISHMENTS

DECEMBER 1992

prepared for:

DISTRICT HEATING AND COOLING PROGRAM
UTILITY SYSTEMS DIVISION
OFFICE OF ENERGY MANAGEMENT
OFFICE OF UTILITY TECHNOLOGIES
CONSERVATION AND RENEWABLE ENERGY
U.S. DEPARTMENT OF ENERGY

prepared by:

BNF Technologies Inc.
4401 Ford Ave., Suite 310
Alexandria, VA 22302

Under Contract No. DE-AC01-91CE35038

Table of Contents

1. Executive Summary 1

2. Introduction 3
   A. Background 3
   B. Description of typical DHC systems 5
   C. Advantages of using DHC systems 6

3. DOE's District Heating and Cooling (DHC) program 7
   A. DHC program description 7
   B. DHC program goals support the National Energy Strategy 8

4. Major DHC Project Activities And Results Achieved 9
   A. Research and development projects 9
      (1) Distribution systems 10
         (a) Advanced fluids 10
         (b) Ice slurries in district cooling systems 19
         (c) Piping 24
         (d) Operation and maintenance 27
      (2) Thermal energy production improvements 33
      (3) Analytical tools 40
      (4) The International Energy Agency (IEA) program on DHC 46
   B. Market adoption initiatives 50
      (1) Initiatives for advanced DHC systems 51
      (2) Technology exchange 77
      (3) Collaborative demonstration program 79
      (4) Current projects 81
         (a) District cooling detailed engineering and design studies 81
         (b) Cogeneration proposals 82
         (c) Georgia World Congress Center and Georgia Dome Complex 83
         (d) DHC market potential estimation 83
         (e) DHC/cogeneration characterization study 83

5. National Action Plan 84
   A. DHC/C Planning Committee 84
   B. DHC/C fall workshop 84
   C. Goals, strategies and actions 85

Summary Tables

RESEARCH AND DEVELOPMENT PROJECTS:

Distribution Systems:

Advanced Fluids 10

Ice Slurries 19

Piping 24

Operation and Maintenance 27

Thermal Energy Production Improvements 33

Analytical Tools 40

IEA DISTRICT HEATING RESEARCH, DEVELOPMENT, AND DEMONSTRATION:

Annex I, 1983-1987 47

Annex II, 1987-1990 48

Annex III, 1990-1993 49

MARKET ADOPTION INITIATIVES 51-53

Illustrations[1]

Simplified district heating and cooling system 5
Present program organization chart 7
Towns with DHC and without DHC 8
District cooling piping costs 11
District cooling with and without advanced fluids 12
Advanced fluids benefits 12
Argonne National Laboratory's flow and heat transfer facility 13
High temperature flow loop 14
Heat transfer tube test section instrumentation 15
Friction reduction agent degradation test loop 16
Full scale testing flow loop 17
Direct freeze ice slurry system 20
Example of district heating conduit 24
Ultem 1000 pipe in constant tensile load test 26
Acoustic leak detection in underground piping 28
Vacuum steam radiator system 32
Jet refrigeration system 35
Three types of heat exchangers for extracting heat from mine water 36
Fuel use comparison between electric-only and cogeneration power plants 37
Quasi-open-cycle heat pump district heating system 38
Crossover steam extraction piping 45
Growth of district cooling use in key localities 50
Buffalo, NY, district heating and cooling system plan 55
Camden, NJ, project 56
Clark University cogeneration and district heating facility 58
Miami district cooling piping network 62
University of Minnesota district heating/cogeneration system 63
Provo, UT, project 68
St. Paul's hot water district heating system 70
Typical cooling system piping arrangement in mechanical room 71
Ice slurry cooling at NSP North Service Center 80

[1]Including illustrative tables

THE DEPARTMENT OF ENERGY DISTRICT HEATING AND COOLING PROGRAM A DECADE (1982-1992) OF ACCOMPLISHMENTS

1. Executive Summary

District Heating and Cooling (DHC) systems have evolved over an extended period of time within a complex economic, political, social and technical community. Developers and customers from the public and private sectors have worked together, often in fragmented and piecemeal efforts, to develop new or improve old district heating and cooling systems. The U.S. Department of Energy (DOE) works in partnership with industry and the utility sector to develop technological improvements for DHC systems. DOE also works with the Department of Housing and Urban Development (HUD), other federal agencies, state and local governments, universities, private industry, professional societies, trade associations, and individuals to increase the market adaption rate of energy-efficient and cost-effective DHC systems.

DHC accomplishments by DOE have been numerous, ranging from technology development efforts in laboratories through extensive feasibility assessments and full scale implemented engineering projects. Beginning in 1982, key successful projects, funded or influenced in part by DOE, are identified. Projects such as the district heating projects in St. Paul, Minnesota, and Trenton, New Jersey, set the pace for many follow-on efforts. In parallel with these major architect/engineering efforts were research and development laboratory efforts designed to continually improve the DHC technology base. Progress in areas such as improved friction-reducing additives to reduce pumping power and piping size requirements can result in a 20% reduction in district cooling costs. Acoustic leak detection, piping insulation, meters to measure steam usage, and advanced heat pumps also make a dramatic improvement in DHC energy-saving capabilities, and will continue to do so. During this decade there has been a research focus on increasing the performance and reducing the cost of distribution systems, which typically account for 50% of the cost of a DHC system. More recently, focus has shifted from district heating systems to district cooling systems, in recognition of favorable economic trends for these systems, their value as demand-side management (DSM) resources, and as a way to produce cooling without the environmental problems caused by CFC refrigerants. A workshop jointly sponsored by DOE with the Electric Power Research Institute (EPRI) on ice slurry cooling was conducted in May 1992 for power utilities and industry. The workshop established the interest in improving the thermal-hydraulic performance of chilled water cooling systems and utility load management.

A study conducted for DOE in 1989 indicated that 78% of cities completing Phase I DHC feasibility assessments supported by DOE grants are in the process of establishing or expanding DHC systems, or have already done so. Impediments for those cities not pursuing follow-on efforts seemed to be the result of institutional and financial barriers, low priority given to the cost of energy, and a lack of interest in conserving energy resources. More recent trends of using refuse-derived fuel in a waste disposal/incineration facility and cogeneration of district

heat and electricity have been mentioned most frequently as being key to the success of a DHC project. In addition, sufficient building density is a prerequisite for the economic implementation of community DHC systems. Support of the local government is also critical for DHC use. Feasibility studies for DHC systems conducted by local governments and their contractors have been essential to all of the implemented project successes.

The augmentation of cogeneration activities to DHC has improved several energy conservation programs. Indications are that District Heating and Cooling/Cogeneration (DHC/C) systems have strong future prospects. DHC/C projects have developed based on experience gained with previously operated DHC systems. The most significant advantage of DHC/C power plants compared to conventional steam-electric generating stations is the improved fuel utilization efficiency. The overall conversion efficiency of an electric-only plant is about 33%. The remaining 2/3 of the energy is rejected to the environment by once through cooling systems or cooling towers. A cogeneration plant, on the other hand, can operate at an overall fuel efficiency of about 70%-80%, but this requires some sacrifice in electrical output. Traditionally, electric utilities have been unwilling to reduce the quantity of electrical output to be able to support DHC. However, recent R&D efforts and more emphasis on medium/low temperature hot water technologies can make it possible to effectively and economically accommodate electric utilities and DHC. Currently, DOE is sponsoring three studies being carried out to evaluate different types of DHC/C options. The studies were selected by Oak Ridge National Laboratory (ORNL) from eleven proposals submitted in March of 1992. The studies are being conducted at Catholic University in Washington, DC, the University of Alabama, and the City of Akron.

The current status report of activities includes discussion of projects such as the ice slurries field test effort to be completed in 1995/1996, planned by Argonne National Laboratory (ANL) in conjunction with Northern States Power and EPRI; and cost-shared studies in eight cities for detailed engineering and design of district cooling systems scheduled to be completed in September, 1993. Several projects which are currently ongoing are: the DHC market potential estimation study that is being developed by ANL, the DHC/C characterization study conducted by ORNL, and the DHC feasibility assessments to be performed in conjunction with the Georgia Tech University in connection with the 1996 Olympics in Atlanta.

Recent efforts funded by DOE include projects such as the DHC/C Planning committee established in the spring of 1991 and results of the DHC/C fall 1991 workshop hosted by the Utility Systems Division of DOE Headquarters supported by the ORNL. A National Action Plan developed during the fall workshop addresses DHC/C goals, strategies and actions needed for continued DHC/C improvement and implementation.

2. Introduction

A. Background

Beginning in the late nineteenth century, district heating systems have been developed to serve various users and buildings located in urban areas, typically the central business district. Many of these systems were owned by the local electric utility. Recently, the older urban systems have declined in number and in the amount of energy they supply. New power plants have typically been located away from central locations in cities. Oil use has declined to only about 5% of the fuel mix for electric generation. However, there are many applications where central systems are appropriate. In addition to centralized urban systems, there are institutional systems used on college and university campuses, military bases, industrial parks, multifamily residences, and office, medical, and commercial sites. Institutional systems serve a single user or several buildings clustered together.

Historically, the abundance of inexpensive energy provided an environment where developments were planned without focusing on energy efficiency. However, during the 1970's, inflating energy prices and petroleum availability refocused national attention, causing a renewal of interest in DHC. DOE was instrumental in helping many communities investigate the desirability of DHC systems. As a result, many cities either refurbished their old DHC systems or built new systems. Several states also established DHC programs. However, despite the renewed interest in DHC in the 1970's, and the many communities that are now operating modern DHC systems, financial, institutional, and regulatory barriers have made it difficult for DHC to be fully adopted where it is the most economic alternative.

Recently, DOE, in conjunction with HUD and private organizations, has provided assistance to cities in analyzing the application of DHC systems to address some of their economic and community development needs. Most of the funding for district heating and cooling has been generated in the private sector. DOE has provided leadership for the development of technologies which have significantly improved the energy efficiency and economics of DHC systems. Also, by participating in conferences and symposia, DOE stimulated activities in community assessments and feasibility studies and further action by the private sector.

The importance of the progress DHC has made in other countries should also be recognized. As an integral part of the DHC program, DOE cooperates with eight European countries (Denmark, Finland, Germany, Italy, Netherlands, Norway, Sweden, and United Kingdom) and Canada under the International Energy Agency (IEA) Implementing Agreement on District Heating and Cooling. Many technologies demonstrated in these countries, especially the Nordic region, have been applied to DHC systems in the United States. The IEA has provided a forum for continued international DHC information exchange. The DOE program continues to be active in disseminating IEA research results to owners, operators, and developers of DHC systems in the United States. Programs for the development of DHC technology have resulted from DOE participation in IEA research and development (R&D) activities.

This report examines accomplishments in DHC projects influenced by DOE since 1982. The report lists projects that are representative of the many DHC accomplishments resulting from DOE participation over the last 10 years. These efforts have been grouped into two sections: R&D of DHC technologies and DHC market adoption initiatives.

The R&D section provides four categories of projects dealing with: distribution systems, thermal energy production improvements, analytical tools, and the IEA program on DHC. A synopsis table of projects in the respective categories is provided, prior to a summary description of each project.

The market adoption initiatives describes primarily representative projects in which DOE participated to provide initiatives for the advancement of DHC systems. In addition, as part of the market adoption initiatives, representative events in technology exchange and collaborative demostration program efforts are provided. Present activities are also described.

Currently, in addition to the R&D efforts by the national laboratories, there are several ongoing activities. A summary of these activities is provided under the current projects section. Three projects have been selected by ORNL for cost-shared cogeneration designs for DHC systems: Catholic University, University of Alabama, and the City of Akron. Grants made by DOE have made it possible for eight cities to currently undertake cost-shared engineering and design studies of advanced district cooling systems. Feasibility assessments with Georgia Tech University will evaluate the potential of DHC development at the campus in conjuction with the 1996 Olympics facilities in Atlanta. Two studies scheduled to be completed in 1993, are the DHC market potential estimation study by ANL, and the DHC/C characterization study conducted by ORNL.

The report also presents accomplishments that have been recently taking place in terms of current status of DOE participation. Included are events such as the DHC/C Planning Committee that was formed in the spring of 1991 and the workshop held in the fall of 1991. These events are DOE accomplishments because out of these DOE sponsored activities, an action plan for DHC/C was developed. The action plan has provided goals, strategies and actions needed to continue successful expansion of DHC as well as cogeneration.

B. Description of typical DHC systems

DHC systems produce hot water, steam, or chilled water at a central source and pipe it to two or more buildings for use in space heating, space cooling, water heating, or industrial processes, typically at a lower life-cycle cost than individual building equipment could provide. All district heating or cooling systems have four basic components: the fuel or energy source, thermal production, transmission and distribution systems, and customers.

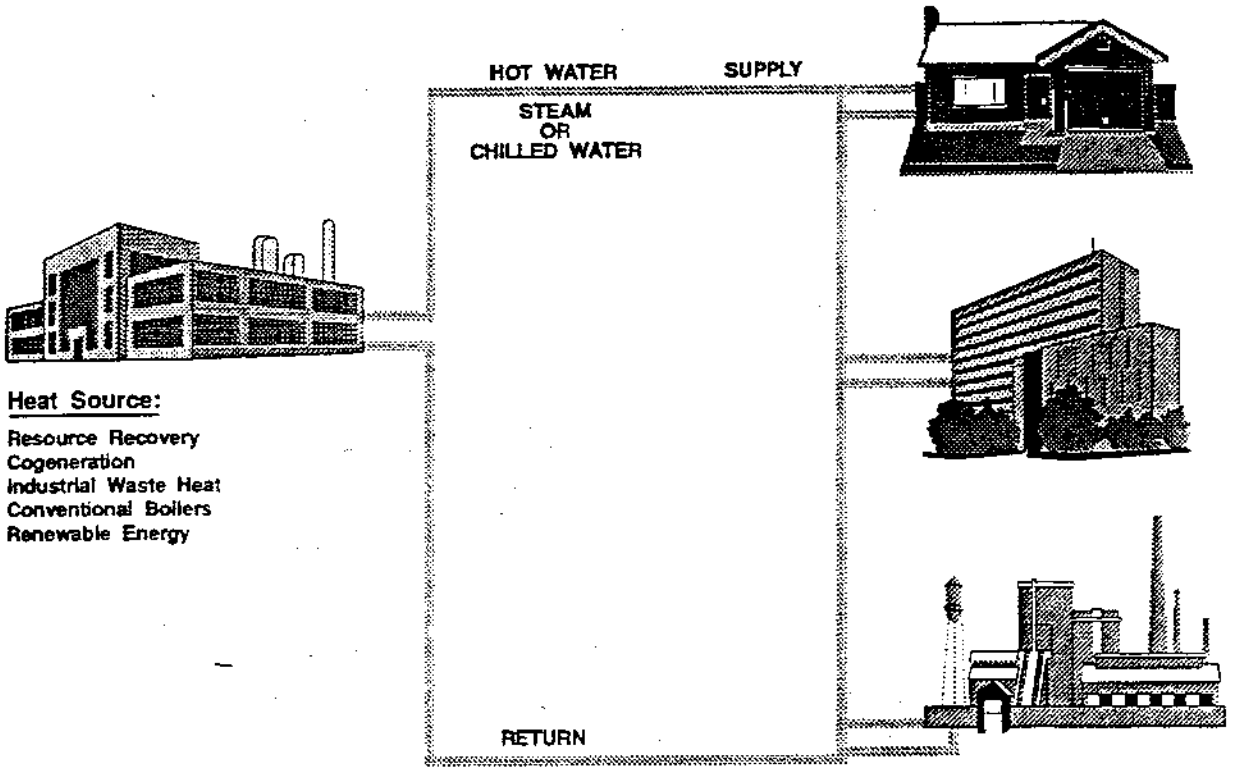

Simplified district heating and cooling system

Various fuels can be used, such as coal, oil, gas, and renewable energy fuels. The energy source may also be heat recovered or extracted from an industrial process, municipal solid waste incinerator, or electric power generation. The thermal production system can be either a centrally located facility or several interconnected plants. Cogeneration electrical plants produce electricity and thermal energy. Transmission and distribution systems transport thermal energy to customers through a network of insulated pipes. The energy is carried in the form of steam, hot water or chilled water through the network. A separate pipe typically returns the fluid to the production plant for reprocessing. Some systems can transport energy up to 70 miles from the production plant. In the building, this thermal energy can be used directly or can be used indirectly through heat exchangers or to provide energy to equipment such as absorption chillers and heat pumps.

C. Advantages of using DHC systems

DHC provides many benefits to its users that make it attractive when compared with individual building heating and cooling systems. Specifically, some DHC benefits are:

- **Improved cost effectiveness.** A central DHC facility has lower capital costs and lower operating and maintenance costs than the costs of procuring, operating and maintaining boilers, furnaces, and cooling systems installed in each building. DHC customers can typically save 10 to 40 percent on their energy bills, based on life-cycle cost savings. District customers generally do not need additional heating and cooling equipment, which frees valuable floor space and reduces replacement, repair, and maintenance costs.

- **Higher efficiency.** Large central systems, which stage boilers and chillers to operate units near full load, are typically more energy efficient than individual building systems, which typically operate inefficiently at lower loads. Cogeneration systems that generate electricity and provide DHC services can use up to 40 percent less energy than typical systems providing these services separately.

- **Greater fuel flexibility.** A large central plant can use or be adapted to various fuels, including coal, residual oil, interruptible natural gas, biomass, refuse, industrial waste heat, solar and geothermal. Single-building systems are generally built for distillate oil or noninterruptible natural gas and generally can not be converted to other fuels. This greater fuel flexibility of DHC can save oil and natural gas typically used in building systems and can allow the choice of the cheapest locally available fuel, which can be a considerable cost avoidance.

- **Environmental benefits.** DHC systems are typically more efficient and thereby produce proportionally less emissions than do building systems. Large DHC boilers have more strictly controlled air emissions than smaller building heating units do. District cooling systems offer alternatives to CFC refrigeration systems, such as heat-activated absorption chillers. District cooling systems can use non-CFC refrigerants, such as ammonia, that are not allowed in high-occupancy buildings.

- **Improved electric load management.** By offering an alternative to electricity for space conditioning or by using central thermal storage, DHC can be used in demand-side management. This can result in significant cost savings for cooling and can assist in deferring additional peaking units for electric utilities.

- **Community economic benefits.** Applications of DHC in settings of high population density can contribute to local employment opportunities and urban revitalization through expansion and introduction of new enterprises.

3. DOE's District Heating and Cooling (DHC) program

A. DHC program description

The District Heating and Cooling (DHC) program is under the Office of Utility Technologies, which is under the Assistant Secretary of Energy for Conservation and Renewable Energy, is managed by the Office of Energy Management, Utility Systems Division (CE-141). The DHC program 1) develops in partnership with industry and the utility sector more energy efficient and cost effective DHC technologies and 2) undertakes cost-shared initiatives with the private sector and state and local governments to increase the adoption of advanced DHC systems.

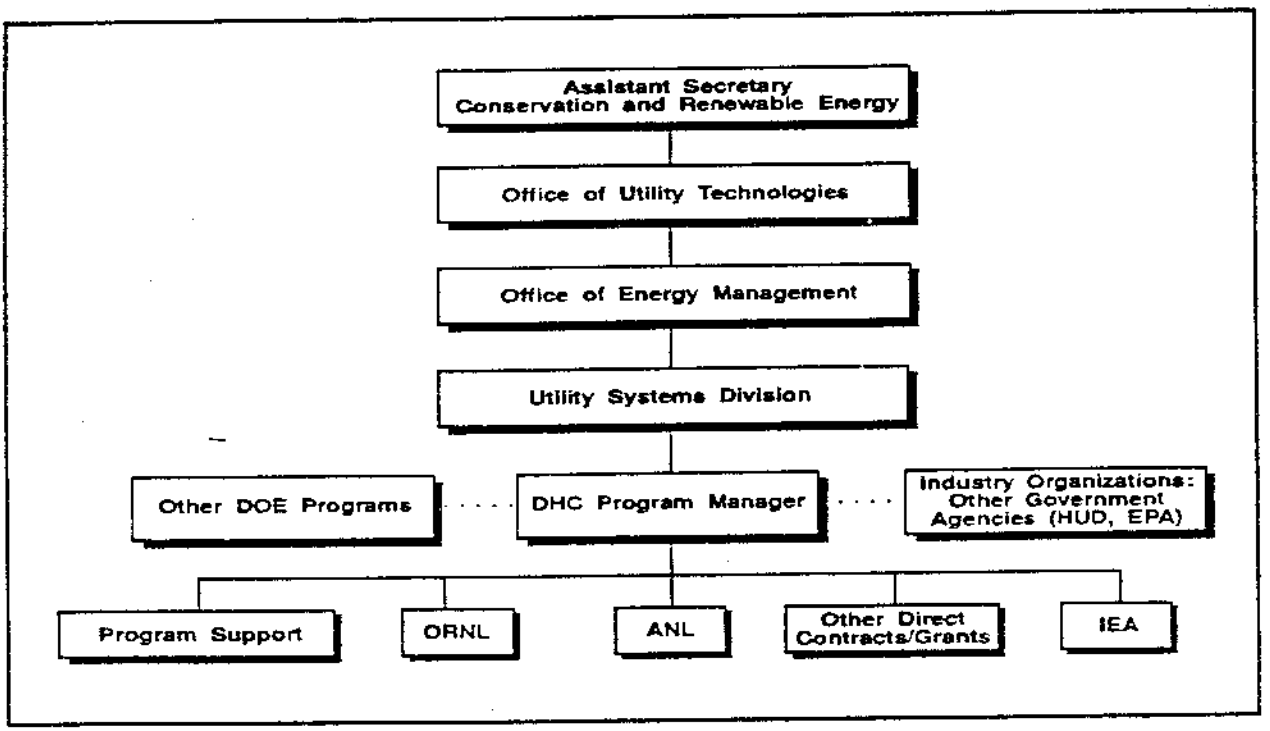

Present program organization chart

The DHC program's efforts are directed at areas that complement industry and help meet the needs of local communities and users, such as universities, hospitals, and military bases. Current DHC program activities include the following areas: 1) advanced fluids research for reduction of friction losses; 2) ice slurry field test to decrease distribution system costs; 3) acoustic leak detector for reducing costs and energy losses due to DHC thermal leaks; and 4) cooling system equipment to develop an ice slurry maker.

B. DHC program goals support the National Energy Strategy

The DOE funded DHC program is focused on contributing to the goals and approaches of the National Energy Strategy. DHC programs encourage the following:

(1) Increased energy efficiency and fuel-flexibility to reduce petroleum dependence.

(2) Improved cost-effectiveness measures to reduce energy costs.

(3) Enhanced environmental quality by significantly reducing air pollution through increased energy efficiency, the use of emissions control technology, and increased use of waste energy.

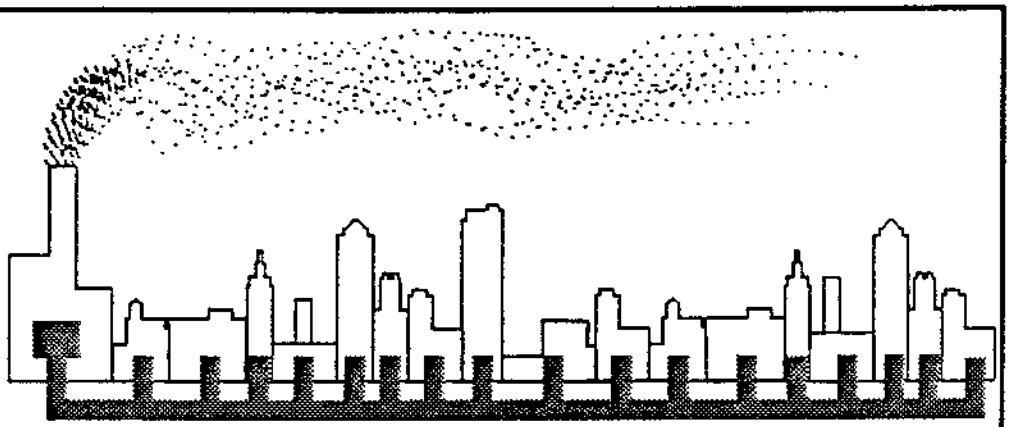

Figure A

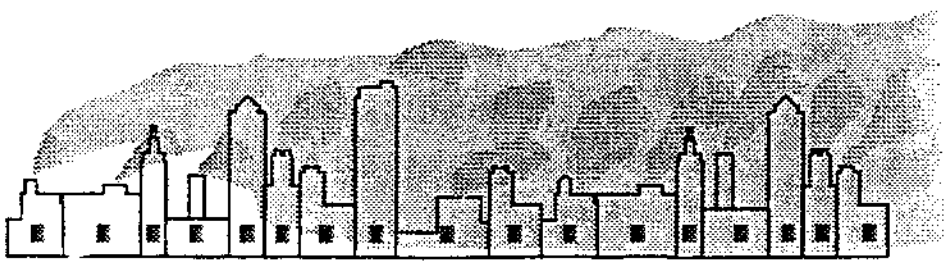

Figure B

Town: with DHC (A) and without DHC (B)

Figure A shows a town with a DHC system, and Figure B shows a like town with individual boilers. The figures above illustrate that DHC provides flexibility and economy with the energy source, cost effectiveness of the central system, and enhanced environment quality from the reduction in pollution that a central system achieves.

4. Major DHC Project Activities And Results Achieved

The report outlines projects that have been either funded or directly influenced by DOE, and the results achieved by these projects. These projects have been grouped into two categories: A. R&D of improved DHC technologies and B. Market adoption initiatives for advanced DHC technologies.

A. Research and development projects

The DHC R&D program comprises four areas:

(1) **Distribution systems:** This area, the largest part of DHC R&D, concerns items that incur the most cost in DHC systems. These technologies can reduce the construction cost of DHC systems by 15%-25%. Distribution systems R&D consists of four areas:

(a) **Advanced fluids:** The potential benefits from the successful application of advanced fluids can be substantial. The primary benefits are the reduction of pipe size and the reduction in pumping. These reduce the customer's cost per amount of thermal resource.

(b) **Ice slurries in district cooling systems:** This area can enable large-scale district cooling systems to be an attractive alternative to single-building cooling systems by dramatically reducing pipe size.

(c) **Piping:** This area concerns R&D efforts to reduce piping installation and maintenance costs.

(d) **Operation and maintenance:** This area addresses problems that could be detrimental to widespread DHC use. It concerns methods to reduce operation and maintenance costs of DHC systems (including the reduction of energy losses) and to increase reliability.

(2) **Thermal energy production:** This area explores new methods of applying thermal energy for DHC use.

(3) **Analytical tools:** This area concerns such methods as computer-aided system analysis.

(4) **International Energy Agency program:** This area involves DOE's cooperation with the IEA on collaborative DHC research.

(1) Distribution systems

(a) Advanced fluids

The table below lists the R&D projects in the area of distribution systems, dealing with advanced fluid projects. See project summaries for quantified results.

RESEARCH AND DEVELOPMENT PROJECTS
Distribution Systems: Advanced Fluids

Project	Project Participants	Nature of Research and Development	Salient Results
1. Advanced fluids for district cooling	Argonne National Laboratory and University of Illinois at Chicago (100% DOE funding)	Investigation of ice particles and friction reduction additives in district cooling fluids	Found significant cost savings
2. Combined friction reduction/heat transfer enhancement	Argonne National Laboratory (100% DOE funding)	Development of advanced district cooling materials	Found reduction in required piping size
3. Friction reduction additives for DHC — polymers and fibers	Argonne National Laboratory (100% DOE funding)	Investigation of polymer, fiber, and filament friction reduction additives	Found friction reduction additives, such as Separan
4. Friction reduction additives for DHC — surfactants	Ohio State University (70% DOE funding)	Investigation of surfactant friction reduction additives	Developed method to remove surfactant additive from DHC fluid
5. Heat transfer enhancement	Argonne National Laboratory (100% DOE funding)	Investigation of phase change slurries' heat transfer enhancement capability	Developed advanced energy transmission fluids
6. Impact of friction reduction additives . . .	Ohio State University (IEA funding)	Investigation of effects of friction reduction additives on district heating systems	Found significant additive interaction effects
7. Low temperature transfer fluids	Drexel University (100% DOE funding)	Investigation of low-temperature heat transfer fluids containing phase-change materials	Found suitable phase change materials for DHC systems
8. Paraffin slurries in district cooling	Drexel University (100% DOE funding)	Investigation of paraffin slurries in district cooling	Found negligible pumping penalties and 17% increased heat transfer

1. Advanced fluids for district cooling

A principal barrier to district cooling is the large initial capital cost, including that of installing pipe under often-congested urban streets. Argonne National Laboratory and a Chicago contractor have estimated the benefits of advanced fluids research and development on the costs of district cooling systems. DOE supported this work.

- **Project activity:** Advanced fluids for district cooling comprise friction-reducing additives, ice particles, and water. Several investigators have studied the technical aspects of advanced fluids, and executed an economic assessment of the impact of these advanced fluids on the cost of new and existing district cooling systems.

- **Results achieved:** The economic assessment, for a 500-ton district cooling system using advanced fluids, has shown:

  - *For New System* — Total piping costs for a new system can be reduced by more than 50% when ice slurry and friction-reducing additives are used together. This finding is significant, since distribution systems typically account for half the capital cost of a DHC system. The required pipe diameter decreases from 12 to 5 inches with ice and additives.

  - *For Existing System* — Existing system cooling load capacity increases by 500%, without installation of new piping, when the ice and additive pair is used. The only cost is in the replacement of water chillers with ice generators. Conventional water technology to expand a like system would require installing five times the existing piping, and the cost would increase by $37 million over that for the ice and additive system. Ice slurries also result in considerable cost savings in building systems (for such items as coils, ducts, fans for air handlers, and piping).

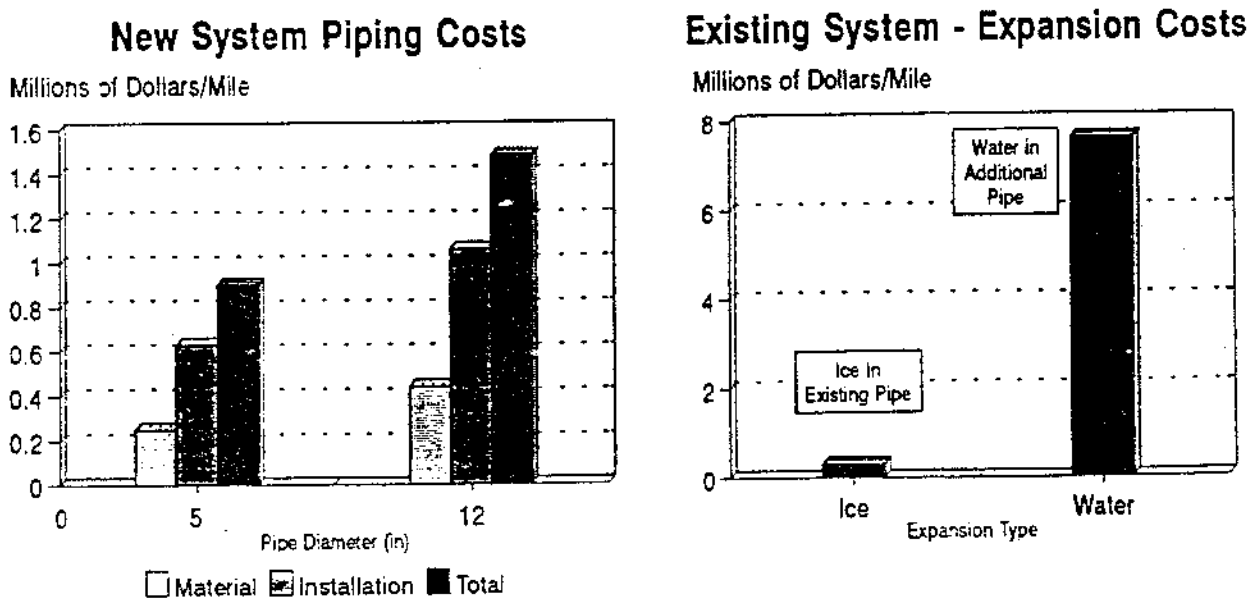

District cooling piping costs (Source: Argonne National Laboratory)

2. Combined friction reduction/heat transfer enhancement

Argonne National Laboratory (ANL) researchers have developed advanced energy transmission fluids and, from these fluids, obtained engineering design information on the use of these fluids in DHC systems. DHC researchers have employed two means (or concepts) to improve DHC systems through the fluids involved: 1) friction reduction additives and 2) phase change slurries. According to scoping test results, a fluid incorporating both these concepts has the greatest potential for improving DHC systems.

- **Project activity:** ANL researchers developed fluids containing 1) friction-reducing additives, 2) phase change materials, and 3) carrier fluids compatible with DHC systems. To identify optimum fluids, the researchers made both friction reduction and heat transfer measurements. To study the advanced fluids, components, and system interaction on a large scale, ANL researchers built a DHC simulator.

- **Results achieved:** In their research, ANL investigators accomplished the following:
  - The researchers performed proof-of-concept pressure drop measurements on combined concept fluids with cross-linked, high-density polyethylene particles and a friction reduction additive.
  - The tests showed that combined concept fluids at 30% particle loading can enable pumping at a pressure drop as low as 50% of that required in pumping hot or chilled water.

The tables below show the potential benefits from combined concept fluids in DHC systems.

DISTRICT COOLING WITH AND WITHOUT ADVANCED FLUIDS
4-mile Long System, 8.6-hp Power Consumption

Fluid	Pipe Diameter (inches)	Flow Rate (gallons/min)
Water alone (existing system)	12	1000
With friction reduction additive	6	1000
With phase change (ice) slurry, 50% loading	7	390
With both concepts	4.5	390

ADVANCEL FLUIDS BENEFITS
Percentage Reduction in System Requirements

System Type	Flow Rate	Pressure Drop	Storage Tank Volume
Heating	60	10	40
Cooling	20	1	10

3. Friction reduction additives for DHC — polymers and fibers

Friction reduction additives in DHC systems can significantly reduce pipe, heat exchanger and pump size requirements. This research was conducted primarily by Argonne National Laboratory with funding from DOE.

- **Project activity:** In this project, researchers sought to identify and develop additives to reduce frictional losses in DHC systems, and to characterize their influences on pressure drop and heat transfer. They began with screening linear polymer, fiber, and filament additives. Initial tests took place at the ANL Flow and Heat Transfer Test Facility. Then the researchers built a large-scale DHC system simulator and continued tests.

- **Results achieved:** The researchers have:
  - Completed tests on several linear polymer additives at the ANL Flow and Heat Transfer Test Facility.
  - Found that Separan can achieve over 60% reduction in frictional losses at 45°F and 190°F.
  - Showed that synthetic fibers as friction reduction additives hold considerable promise.
  - Built a large scale DHC system simulator for tests in a temperature range from 7°C to 120°C, and flow rates up to 1200 gallons/min.

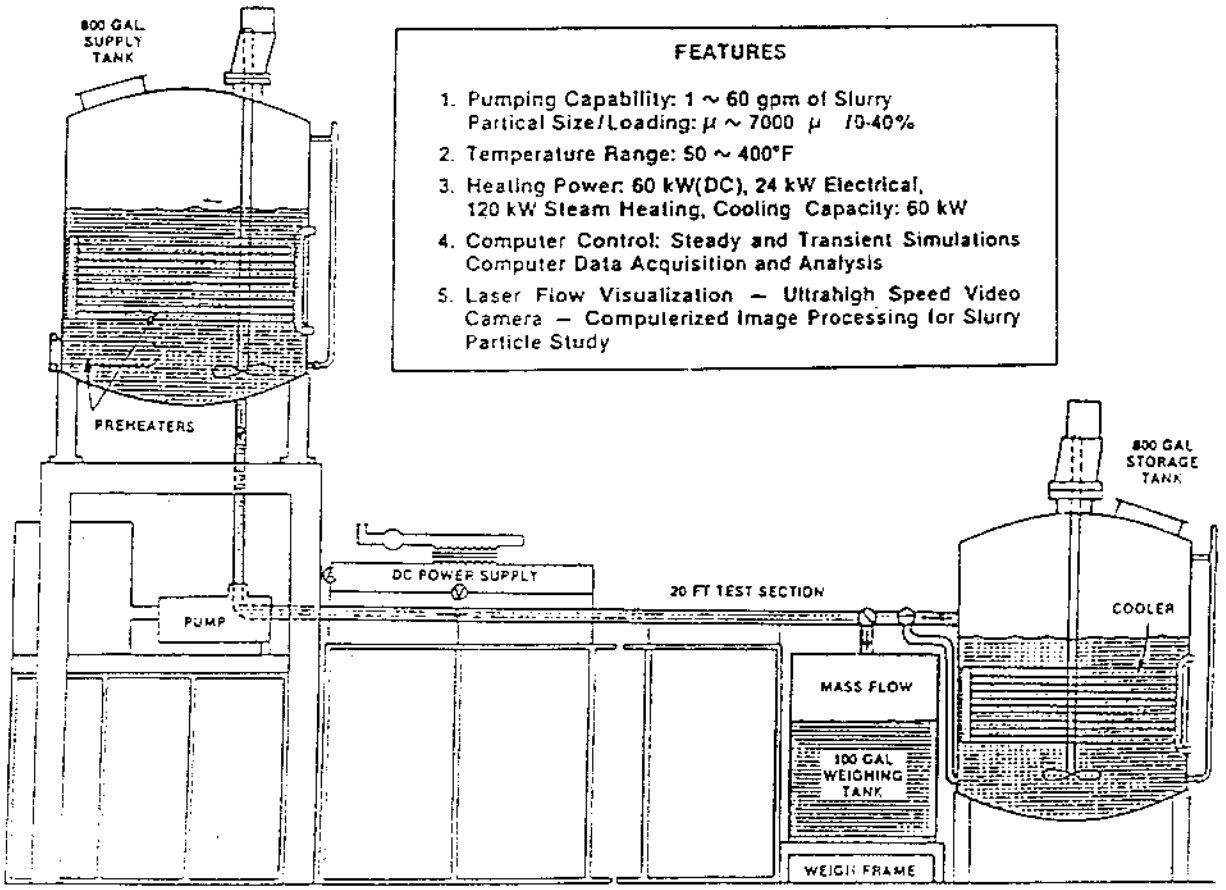

Argonne National Laboratory's flow and heat transfer facility (source: Argonne National Laboratory)

4. Friction reduction additives for DHC — Surfactants

In DHC systems, pumping costs are an important operating expense affecting the economic feasibility of the systems. Efforts to reduce costs by appropriate circulation system design can be partially effective, but frictional losses in pipe flow cannot be eliminated by hardware design. Friction losses can be reduced significantly by the use of friction reducing additives. In a project partially funded by DOE, Ohio State University researchers pursued the development of these substances.

- **Project activities:** The researchers worked to develop DHC additives with good friction reduction and heat transfer properties.
- **Results achieved:** The researchers:
  - Evaluated additives for friction reducing capabilities and heat transfer characteristics.
  - Performed tests with several tube sizes to develop scaled-up correlations.
  - Developed a method for surfactant additive removal from district cooling circulating water, outside the system.

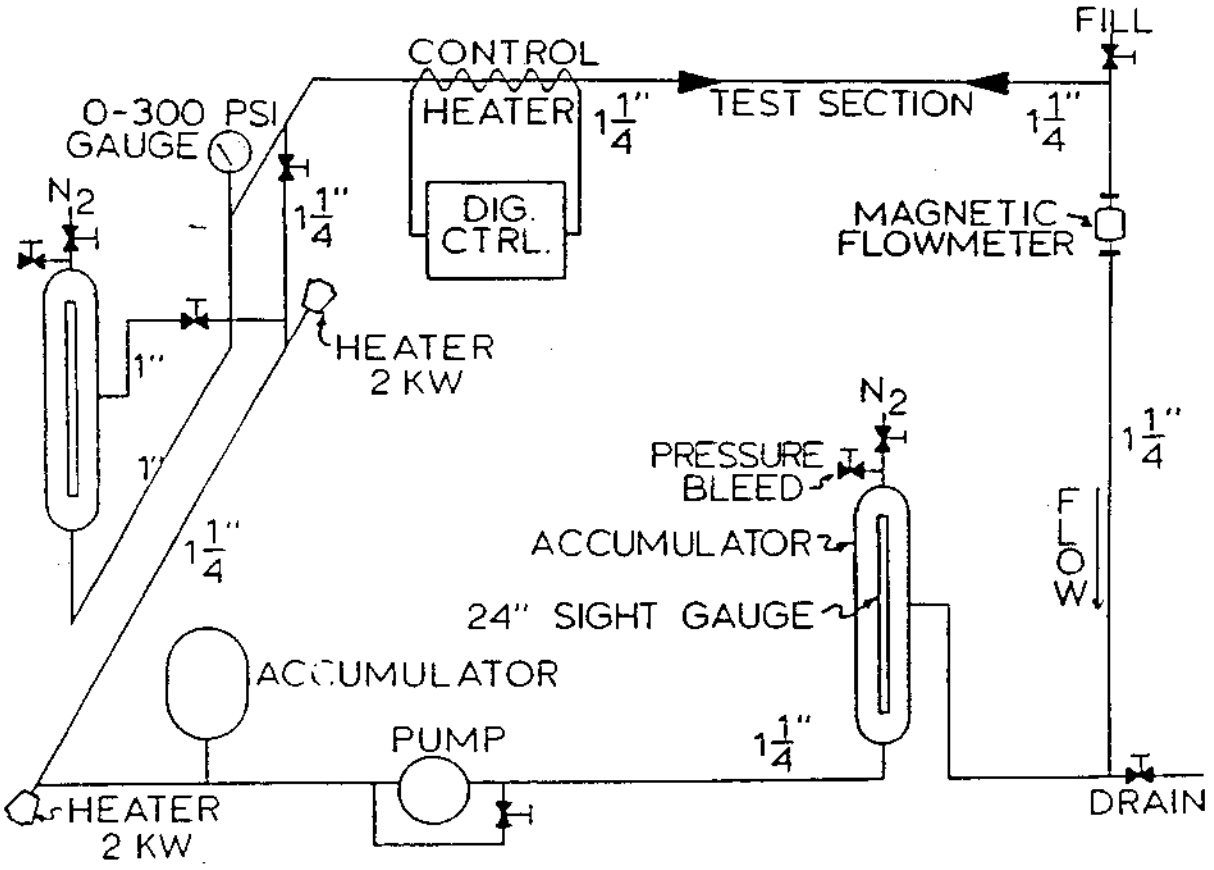

High temperature flow loop (source: Ohio State University)

5. Heat transfer enhancement

The development of scientific and technical bases for the uses of phase change slurries to enhance both bulk energy transport and heat transfer in DHC systems is important because of the potential avoidance of up-front capital and operating costs. DOE provided $150,000 in 1989 for this research project. Argonne National Laboratory conducted this research, in coordination with Drexel University and Ohio State University.

- **Project activities:** The researchers pursued the development of a scientific/technical basis for phase change slurries that enhance both bulk energy transport and heat transfer in DHC systems.

- **Results achieved:** The researchers have:

  - Developed advanced energy transmission fluids, including cross-linked high density polyethylene (X-HDPE) and ice slurries.

  - Demonstrated that the slurries incurred only minor pumping penalties, in comparison to pure carrier fluid. In some cases slurries with 0.05-inch particles required even less pumping power.

  - Proved the feasibility of pumpable ice slurries.

  - Conducted X-HDPE proof-of-concept tests in ANL Slurry Heat Transfer Test Facility.

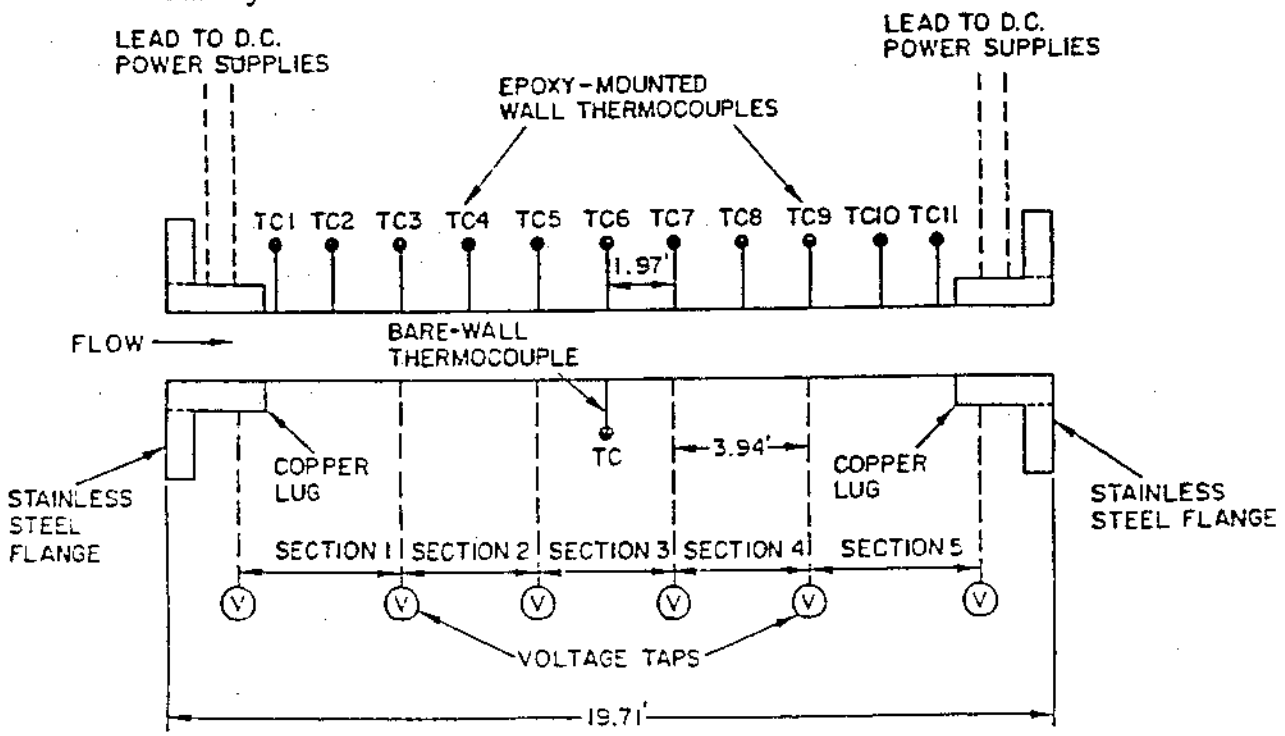

Heat transfer tube test section instrumentation (source: Argonne National Laboratory)

6. Impact of friction reduction additives on corrosion, contamination and interaction with other additives in district heating systems

Investigation of the effects of any prospective friction reduction additive on district heating systems that use water treatment additives is necessary before the friction reduction additive is introduced into a district heating system. Interactions between additives may alter the chemical effects of the water treatment additive or produce other undesirable results. Ohio State University has conducted such research with funding from IEA.

- **Project activities:** The researchers investigated the effects of friction reduction surfactant additives on corrosion, contamination, and interaction with water treatment additives. They tested and evaluated three friction reduction additives: Humko Kemamine Q2983C with sodium salicylate, Humko Kemamine Q2803C with sodium salicylate, and Hoechst Aktiengesellschaft's Dobon. The additives were tested at or near the maximum temperature at which they exhibited friction reduction.

- **Results achieved:** The researchers:
  - Found that additive interactions made friction reduction additives less effective in some cases and increased corrosion rates in others.

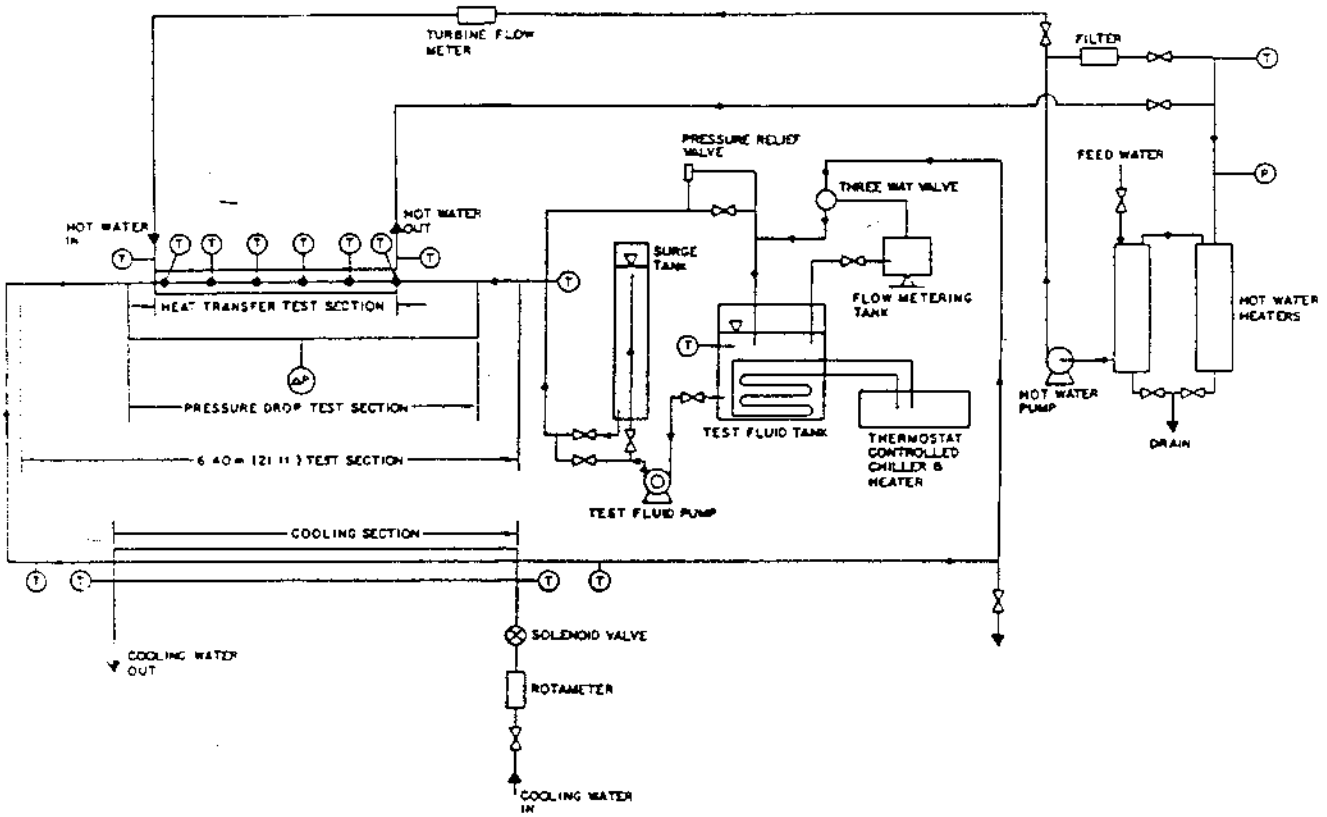

Friction reduction agent degradation test loop (source: Ohio State University)

7. Low-temperature heat transfer fluids

Highly efficient heating and cooling mechanisms are required in heat exchangers for application in energy intensive DHC systems. The performance of conventional heat exchangers can be substantially improved by many techniques, including the use of solid particles with melting temperatures within the working range of the DHC carrier fluid, called phase change materials. DOE provided $163,000 in 1989-1990 for this project. The Department of Mechanical Engineering of Drexel University conducted the research.

- **Project activities:** The researchers demonstrated that new low-temperature advanced heat transfer fluids will simultaneously produce substantial heat transfer enhancement and friction reduction in DHC systems. Testing began in an intermediate size test loop and progressed to full-scale field testing.

- **Results achieved:** The researchers have:
  - Identified suitable phase change materials with melting temperatures of 60°C to 85°C for district heating and 5°C for district cooling.
  - Tested heat transfer enhancement capabilities of phase change materials in a single tube heat exchanger.
  - Established the validity of the proposed heat transfer enhancement method by conducting tests with commercial heat exchangers.
  - Performed tests of various friction reduction additives added to the mixtures of carrier fluid and phase change material particles.

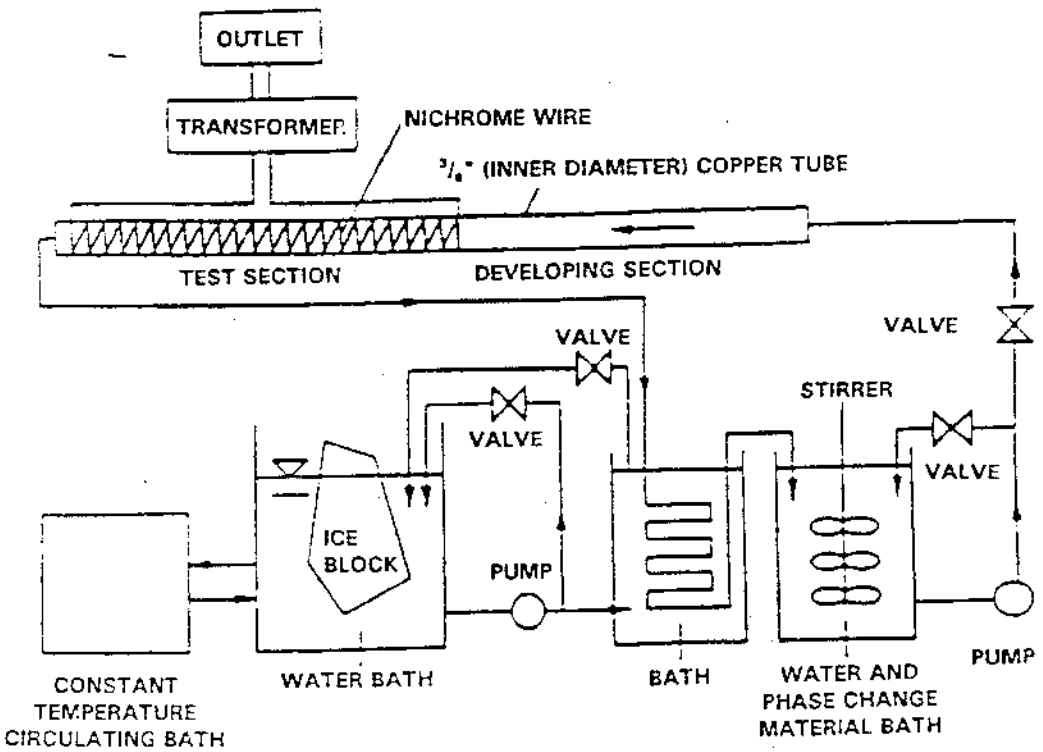

Full scale testing flow loop (source: Drexel University)

8. Paraffin slurries in district cooling

The circulating fluid in a district cooling system can achieve significant increase in its heat transfer performance if it contains a phase change material with a melting/freezing temperature between the send-out and return temperatures of the circulating fluid. This improved heat transfer capability reduces pumping requirements. The improved mixing that results with solid particles in the carrier fluid tends to increase convective heat transfer and thereby decrease required heat exchanger sizes. This type of circulating fluid does not require any modifications to existing heat exchangers and can be used with other heat transfer augmentation techniques. In the Department of Mechanical Engineering of Drexel University, researchers investigated the use of paraffins, hexadecane, tetradecane, and mixtures (which melt between 42°F-65°F), in water as a district cooling circulating fluid. DOE funded this project.

- **Project activity:** First, the researchers measured the phase change temperatures and heats of fusion of laboratory and commercial grades of hexadecane, tetradecane, and mixtures. Then they investigated particle clumping in the slurries, which clogs the pipes, and the efficacy of an emulsifier in eliminating this clumping. In a specially constructed facility, the researchers pumped various water/hexadecane mixtures at measured rates through a heat transfer test section and applied measured amounts of heat to the fluids. They measured pressure and temperature at points along the test section pipe. From these measurements, they determined the pumping penalty and the improvement in the heat transfer coefficient that result from hexadecane in the water.

- **Results achieved:** The researchers found that:

  - Laboratory grade tetradecane/hexadecane mixtures with less than 10% and with more than 90% tetradecane have relatively high fusion energies, approximately $^2/_3$ of that of the water/ice phase change. Commercial grade tetradecane/hexadecane mixtures have lower heats of fusion and lower melting temperatures than the laboratory grade paraffins, but still show promise.

  - While freezing, hexadecane particles form large clumps that are very stiff and difficult to break up — properties that could lead to clogging pipes. The emulsifier that the researchers used very effectively reduces this clumping. At sufficient concentrations of the emulsifier, the hexadecane particles are too small to be seen by the naked eye.

  - The pumping penalties that result from the presence of hexadecane in the circulating fluid are negligible.

  - The 20.6% hexadecane slurry improved the heat transfer coefficient by 17% over that of water alone.

(b) Ice slurries in district cooling systems

The table below summarizes R&D projects in the area of distribution systems, dealing with ice slurries in district cooling systems. Ice slurries can significantly reduce piping size and cost in comparison to chilled water usage.

RESEARCH AND DEVELOPMENT PROJECTS
Distribution Systems: Ice Slurries

Project	Project Participants	Nature of Research and Development	Salient Results
1. Direct freeze ice slurry system	Chicago Bridge & Iron (CBI) Research Corp. (100% DOE funding)	Demonstration of direct freeze process for producing ice slurries for district cooling	Found ranges of conditions for successful pumping of ice slurries
2. Ice production heat exchanger	Brookhaven National Laboratory (100% DOE funding)	Development of thin-film polymer heat exchanger with ethylene glycol heat sink for forming ice in slurries	Developed working laboratory-scale system
3. Ice slurry evaporator development	Brookhaven National Laboratory (DOE funding)	Ice slurry evaporator design that eliminates ice coating walls	Developed evaporator prototype
4. Ice slurry loading and heat transfer	Argonne National Laboratory (100% DOE funding)	Investigation of bulk energy transport of and heat transfer with ice slurries	From tests and measurements of pumped and flowing ice slurry behavior, gathered data essential to district cooling system design
5. Influence of ice slurry characteristics on hydraulic behavior	Applied Associates, Ltd. (IEA funding)	Investigation of problems involved with pumping ice slurries, with and without additives	Evaluated interactions between ice slurry characteristics and DHC operating parameters
6. Slush ice district cooling systems	Brookhaven National Laboratory (DOE funding)	Computer model energy cost comparisons between district and individual-building cooling systems	Found that district cooling systems were significantly competitive with individual-building cooling systems

1. Direct freeze ice slurry system

Because of its high thermal efficiency, the direct freeze process promises to be highly effective in improving district cooling system efficiency — and significantly reducing costs. At Chicago Bridge and Iron (CBI) Research Corporation, investigators have evaluated the performance of a direct freeze ice slurry process. DOE provided most of the funding ($143,000 in Fiscal Year 1988), and CBI supplemented it ($48,000).

- **Project activity:** In the first phase of the project, CBI researchers constructed a test facility and tested a direct freeze process that makes ice crystals by bringing the water in direct contact with the refrigerant. In the second phase, the CBI researchers extended the range of test conditions and enhanced the simulation of the prototype system.
- **Results achieved:** CBI researchers have:
  - Analyzed the pumping of the resulting slurry at various ice fractions through pipes of various diameters. In all cases, the ice slurry reduced the pressure drop by 30% to 40% of what would have been required for water alone at the same flow rate.
  - Found that they could easily achieve ice fractions as much as 50%.
  - Modified the original test facility to accommodate a wider range of test conditions and achieved a more realistic simulation of an ice slurry district cooling system.
  - Extended the range of ice fractions beyond 20% at flow rates over 1000 gallons/min through modifying the pressure drop test section.

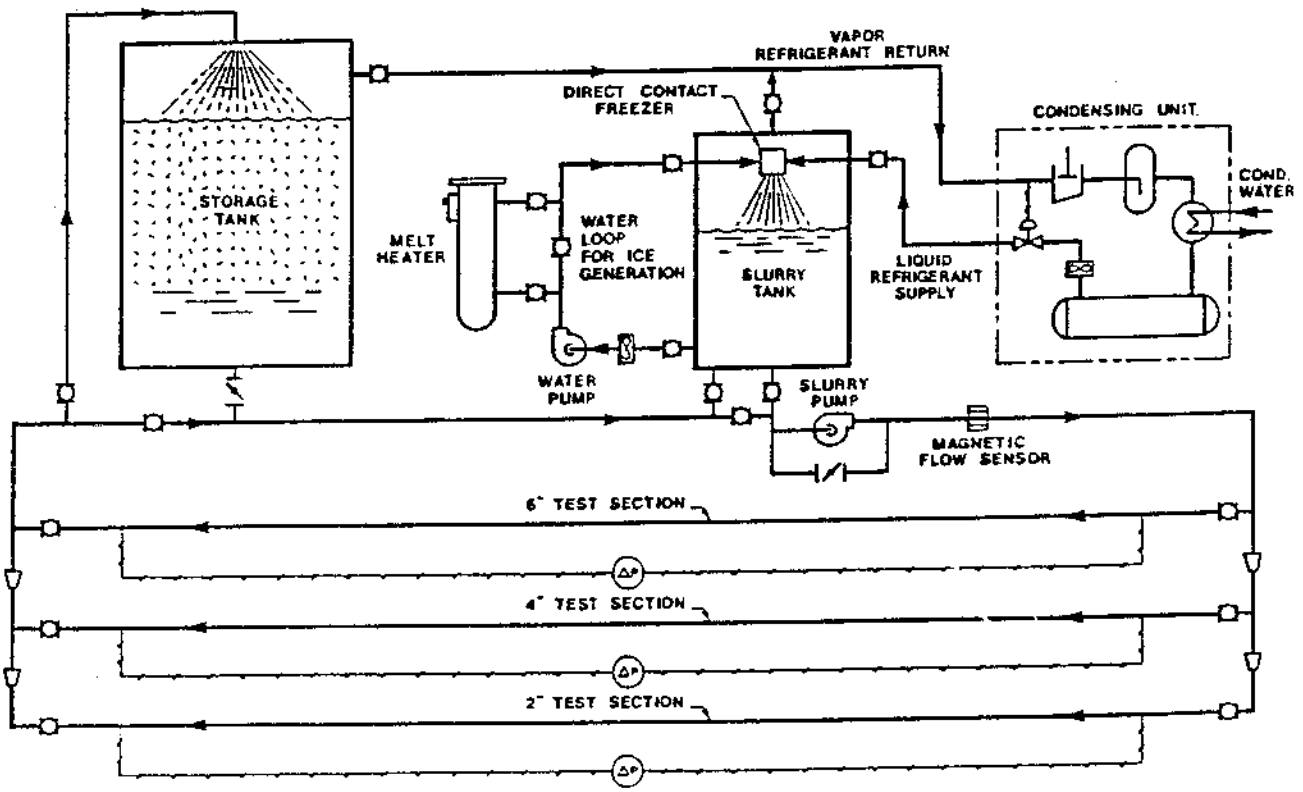

Direct freeze ice slurry system (source: CBI)

2. Ice production heat exchanger

At Brookhaven National Laboratory (BNL), researchers in the Energy Efficiency and Conservation Division developed a relatively inexpensive and efficient heat exchanger for an ice maker. Ice production economy is crucial when ice slurries are the transport medium in district cooling systems. Achieving this allows the advantages that ice slurries bring, in reduced pumped fluid volume and heat exchanger size.

- **Project activity:** The researchers sought to develop a thin-film polymer heat exchanger with an ethylene glycol heat sink to produce ice in ice-water mixtures. When cold brine circulates in the heat exchanger, ice forms on the parallel cylindrical tubes (pads) that make up the heat exchanger. After producing ice with a lab-scale apparatus, the researchers optimized the design of the pads and found the optimum flow rate, ice production rate, and film thickness.

- **Results achieved:** The researchers have:
  - Constructed and operated a system.
  - Improved the design.
  - Formulated a pilot-scale test plan.

3. Ice slurry evaporator development

BNL researchers have sought a solution to ice coating the walls of vapor-compression chiller evaporators. Such a solution is essential for an efficient, reliable evaporator, an achievement crucial to the success of ice slurries in district cooling systems. Previous approaches, such as scrapers, melters, and antifreeze additives, increase energy consumption. Consequently, they increase costs significantly, sometimes to the point of making commonly used chillers impractical for ice slurry production.

- **Project activity:** At BNL, researchers sought a new, efficient, and reliable ice slurry evaporator for district cooling. They identified, tested, and evaluated new designs that promised to overcome shortcomings of current evaporators. They sought a concept that met their major criteria for thermal performance and potential low cost. They explored the use of such transport fluids as dilute salt solutions, organic brines, and, even, pure water.

- **Results achieved:** BNL researchers have:
  - Developed an advanced evaporator prototype.
  - Evaluated results of tests on the prototype and determined modifications needed to improve performance.

4. Ice slurry loading and heat transfer

Researchers at Argonne National Laboratory (ANL) investigated the use of ice slurries in district cooling systems. Because the ice and the water in the slurry change phase, ice slurries enhance energy transport and heat exchange. Their use in district cooling systems could reduce the large costs that current systems incur as a result of the small fluid temperature difference between chilled water supply and return lines. The cost savings comes from the significant reduction in required pipe, heat exchanger, and pump sizes. Also, ice slurries may enable load leveling, obtained from their cool storage. DOE supported this project (with $150,000 in Fiscal Year 1989).

- **Project activity:** ANL researchers have studied bulk energy transport of phase change slurries and heat transfer involving these slurries. They pumped ice slurries into a test facility and characterized pressure drop and heat transfer. Also, they studied conditions and effects associated with these slurries.

- **Results achieved:** At ANL, researchers have:

  - Constructed an electrically heated ice slurry heat transfer test section with instruments to measure temperature, flow rate, pressure drop, and electrical heating power input.

  - Tested the apparatus with pure water as the fluid and made the data a benchmark for comparison with ice slurries.

  - Made tests/measurements with ice slurries in the heat transfer test section.

  - Tested ice slurries for their pumpability with a progressive cavity slurry pump and studied the pressure drop behavior of the slurries. They proved the feasibility of pumpable ice slurries. However, the ice slush seemed to form ice flake clusters. The pressure drop was less than required for pure water.

  - Identified a friction-reducing additive that improves pumpability of ice slurries.

  - Evaluated potential difficulties inhibiting ice slurry flow and heat transfer and identified the parameters involved.

  - Developed engineering correlations for aiding the design of district cooling systems.

  - Continued ice slurry research with the University of Illinois at Chicago in a project entitled Fundamentals of Ice Slurries. They have completed preparation and testing of a continuous loop test facility and have completed initial experiments.

5. Influence of ice slurry characteristics on hydraulic behavior

In an effort to improve district cooling economics, researchers at Applied Associates, Ltd. studied the production, distribution and flow of ice slurries in district cooling systems.

- **Project activity:** In experiments on laboratory and pilot scale, the researchers investigated the various problems involved with pumping freshwater ice slurries through pipelines. To these slurries, the researchers added friction-reducing agents, corrosion inhibitors, and softening and biocidal agents.

- **Results achieved:** The researchers:

  - Completed the laboratory testing with a 1-inch (diameter) instrumented pipe loop.

  - Evaluated interactions between ice solids loading, crystal shape, size distribution, handling qualities, and pumping energy requirements.

  - Conducted pilot scale tests with a 4-inch (diameter) steel pipe section in a large instrumented test loop.

6. Slush ice district cooling systems

District cooling systems offer advantages over individual building systems by allowing central sites close to rivers or other low summer temperature heat sinks, sites close to open spaces for cool storage, and the reduction of specific chiller and cool storage costs by economy of scale. However, these advantages come with a penalty: the cost of an additional distribution system. This 1987 DOE funded project was conducted by the Brookhaven National Laboratory.

- **Project activities:** With a computer model for DHC technology characterization, the researchers compared delivered energy costs. Figures of merit and comparisons were developed for central and individual building cooling systems. Additional required research and development included an efficient, reliable ice-making evaporator, an efficient heat-activated ice-making chiller, greater slush ice storage experience, and flow research concerning frictional factors and segregation behavior.

- **Results achieved:** Analyses of slush ice district cooling systems indicated that:

  - Slush ice district systems were most competitive with sharply-peaked cooling loads, premium piping installation costs, premium storage cost, and high on-peak electric rates.

(c) Piping

The table below summarizes R&D projects in the area of distribution systems, dealing with piping.

RESEARCH AND DEVELOPMENT PROJECTS Distribution Systems: Piping			
Project	Project Participants	Nature of Research and Development	Salient Results
1. Corrosion protection of DHC system piping	Brookhaven National Laboratory (100% DOE funding)	Development of corrosion-resistant pipe coating	Determined required thickness of coating
2. Low cost design and construction techniques for plastic piping in low density areas	Pequod Associates Inc.; Block Island Power Co. (73% DOE funding)	Development of technically feasible ways to lower DHC piping costs, especially in low-density areas	Designed pilot-scale prototype
3. Nonmetallic piping	Argonne National Laboratory	Development of polyetherimide piping and obtaining engineering design information	Developed prototype

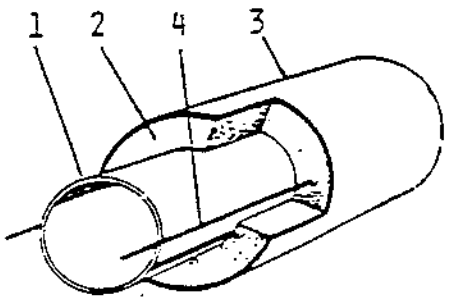

1. CARBON STEEL CARRIER PIPE
2. POLYURETHANE INSULATION
3. POLYETHYLENE CASING
4. ALARM WIRES

Example of district heating conduit (source: Jamestown, NY)

1. Corrosion protection of DHC system piping

Carbon steel piping, most widely used in DHC systems, corrodes as a result of internal or external causes. The corrosion leads to leakage, pipe failure, increased maintenance costs, and DHC service disruption. The composite coatings developed at BNL can reduce initial and operating costs. Funding for the project has come primarily from the DOE geothermal program.

- **Project activity:** BNL researchers developed a corrosion-resistant composite pipe coating for use in constructing new DHC systems or in retrofitting existing DHC systems. The coatings are sprayed on. The research began with small-scale laboratory tests, followed by larger scale tests.

- **Results achieved:** BNL researchers have:

  - Calculated the required coating thickness from the composite properties.

  - Completed the small-scale laboratory tests and conducted larger scale tests.

  - Developed methods for pipe joining and retrofitting.

2. Low-cost design and construction techniques for plastic piping in low density areas

Pequod Associates Inc. and the Block Island Power Company have investigated means of lowering the cost of the distribution piping in DHC systems. Since distribution systems typically account for 50% of the initial cost of a DHC system, lowering piping costs increases the market opportunities for DHC systems. Reducing piping costs through optimizing pipe selection and installation is particularly important in low-density areas.

- **Project activity:** To identify technically feasible ways of lowering piping costs in DHC systems for low-density areas, the researchers developed a pilot-scale prototype of inexpensive design and construction techniques.

- **Results achieved:** The researchers have:

  - Collected the technical and installation specifications for the products and equipment involved, including building codes.

  - Formulated test procedures.

  - Designed a pilot-scale prototype.

  - Installed plastic piping in test system and analyzed performance of test system.

  - Shown that the system can reduce conventional piping costs.

3. Nonmetallic piping

At Argonne National Laboratory, researchers developed nonmetallic piping and obtained engineering design information for using this piping in district heating systems. As an alternative to steel, piping of such material as thermoplastic reduces installation and maintenance costs in district heating systems operating above 250°F, because of the material's resistance to corrosion and the relative ease of installing, joining, and repairing the pipes. In particular, polyetherimide offers the high-temperature mechanical strength necessary for district heating systems.

- **Project activity:** The researchers tested pipes of a polyetherimide resin, Ultem 1000, and evaluated the usefulness of the material for district heating piping. Ultem 1000 has a UL continuous service temperature rating of 338°F. In the first phase of the project, the researchers measured the mechanical properties of the pipe in laboratory-scale tests. The prototype pipes came from a collaborated effort between ANL, General Electric Company, and PLEXCO. They planned next to develop pipe joints and joint methods, produce polyetherimide pipe, and install it in a district heating distribution system for field testing.

- **Results achieved:** The researchers:

  - Conducted tests to measure the mechanical properties of Ultem 1000 between 68°F and 350°F.

  - Established preliminary design parameters for the material from the test results.

  - Determined that the material in the form of 2-inch SDR 11 pipe (2.375 inches in outer diameter with 0.216-inch thick wall) would have a saturated water design pressure rating of at least 35 psig at 280°F. Because the prototype pipes were produced under less than optimal conditions, production pipes can be expected to be stronger.

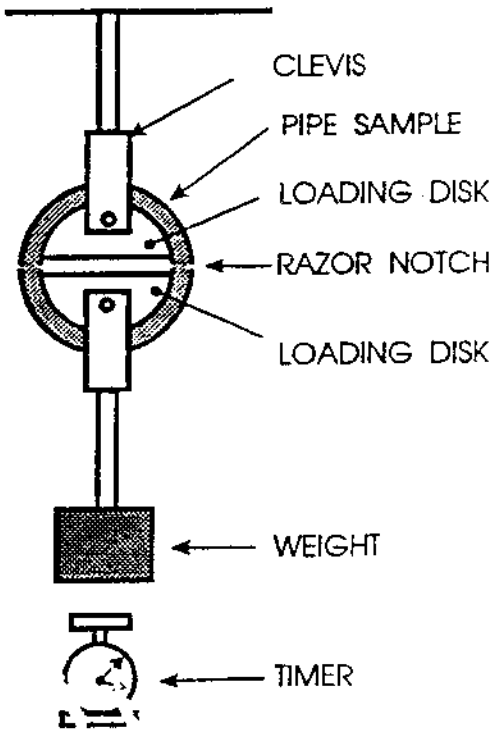

Ultem 1000 pipe in constant tensile load test (source: Argonne National Laboratory)

(d) Operation and maintenance

The table below summarizes the operation and maintenance projects.

RESEARCH AND DEVELOPMENT PROJECTS Distribution Systems: Operation and Maintenance			
Project	Project Participants	Nature of Research and Development	Salient Results
1. Acoustic leak detection and location	Argonne Nat. Lab., ConEd, Northern States Power (54% DOE funding)	Development of acoustic leak detection system	Developed/validated laboratory grade system
2. Advanced thermal meter development	Bailey Controls (60% DOE funding)	Computer-aided design of improved thermal energy meter	Developed prototype meter
3. Common return pipe and once-through hot water supply in DHC systems	Joseph Technology Inc. (44% DOE funding)	Design of system with common hot and chilled water return and once-through hot water supply	Found optimum parameters, developed preliminary design criteria
4. Heat loss measurements for underground piping in place	National Institute of Standards and Technology	Development of microcomputer-controlled instrument/data acquisition system for estimating heat loss or gain in underground pipes	Constructed/field tested instrument/data acquisition system
5. Reinsulation testing and installation, in place, in underground piping systems	GPX Inc. (100% DOE funding)	Testing of new techniques for inspecting underground piping for defective insulation and for installing new insulation	Tested insulation techniques and materials, developed specifications
6. Renovation of existing systems	Burns and Roe Inc.; A.E. Peters and Associates; Community Central Energy Co.	Comprehensive assessment of the technical/economic feasibility of modernizing older district heating systems	Completed assessment, identified prospective systems to modernize, performed preliminary analyses
7. Vacuum steam radiator performance	Pequod Associates Inc. (91% DOE funding)	Evaluation of vacuum steam radiator systems in DHC systems	Found that steam systems can maintain performance at extremely low pressures at temperatures above 150°F

1. Acoustic leak detection and location

An acoustic method could make leak location and repair faster and cheaper. According to the Materials and Components Technology Division of Argonne National Laboratory (ANL), savings from $10,000 to $100,000 are possible for a leak located by acoustic means, by avoiding the excavation costs associated with current technology. Utility liability could be reduced by more effective leak location and repair procedures. ANL's Materials and Components Technology Division began an acoustic leak detection and location project in 1989. During the years 1989 to 1992, DOE contributions of $175,000 and utility contributions of $150,000 (ConEd and Northern States Power) led to a program to evaluate acoustic leak detection technology for steam systems.

- **Project activity:** Researchers developed an acoustic method for locating steam leaks in underground DHC piping.

- **Results achieved:** The following results have been achieved:

  - Existing technology was evaluated. The need for improved leak location technology was established.

  - A laboratory facility was constructed for the testing and evaluation of acoustic leak location systems.

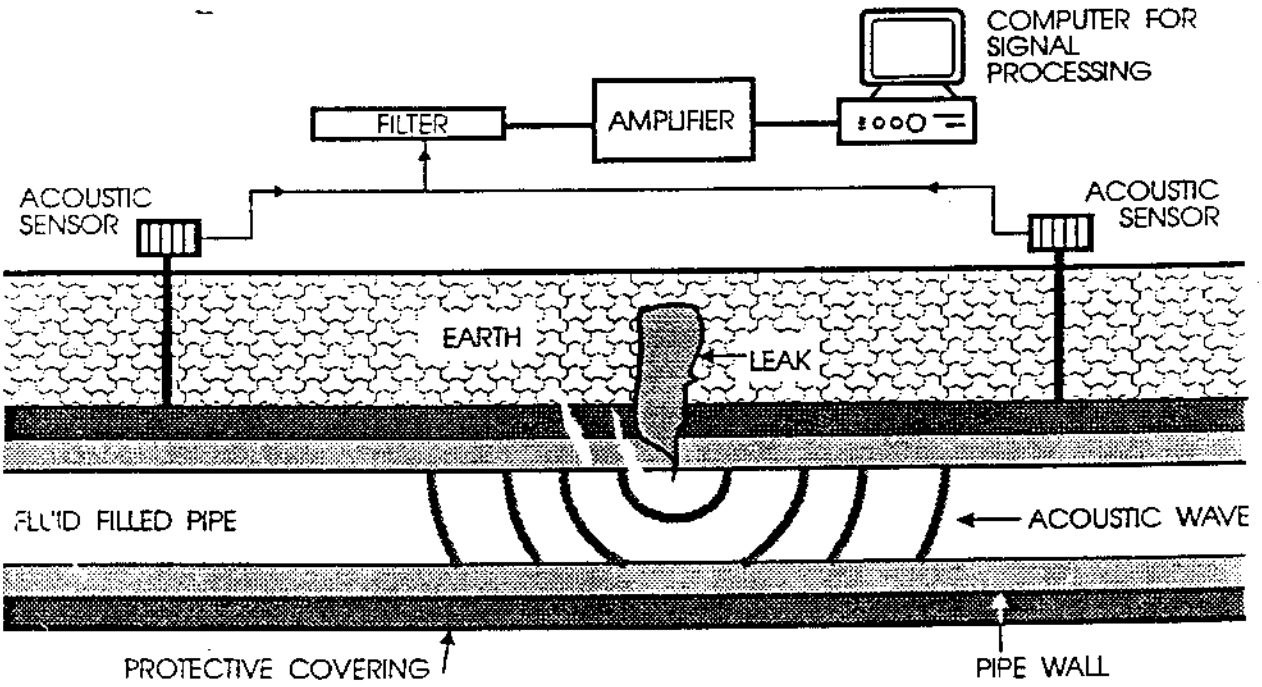

Acoustic leak detection in underground piping (source: Argonne National Laboratory)

- A laboratory grade improved acoustic leak detection system was assembled and evaluated under simulated field conditions.

- The laboratory system was field-tested in Manhattan. Success in locating a leak for ConEd was realized, thus avoiding unnecessary excavation and expense. The system was also validated for different pipe configurations, and the limitations of the system were established. Another important result was that design specifications were developed for a field system.

- Research was initiated in 1992 to develop an in-stream microphone to eliminate complications in signal analysis and enable detection over greater distances than possible with sensors placed directly on the pipe.

- Initial tests have shown success with in-stream microphones.

2. Advanced thermal meter development

The lack of inexpensive and reliable BTU meters has been a constant complaint of operators and customers of district heating systems. Customers feel that they are not fairly assessed for the energy they use, while operators have always been concerned about the difficulty of accurately measuring the energy used by the customers. This project has involved the development of improved thermal energy metering. In the period between 1988 and 1990, DOE provided approximately $80,000 to demonstrate the feasibility and to evaluate the potential accuracy and reliability of a new BTU metering concept developed by Collaborative Planners Inc.

- **Project activity:** This project developed a computer model for an advanced BTU meter and undertook electrical and mechanical design of a prototype meter based on results obtained from computer model simulations. The device continuously and remotely measures the energy flow delivered to customers of a district heating system.

- **Results achieved:** After preparing meter design sketches and drawings the following has occurred:

  - A prototype meter has been built and tested.

  - Research is continuing for improving sensor lifetime for the meters.

3. Common return pipe and once-through hot water supply in DHC systems

Most DHC systems in the United States use four pipes for hot and chilled water: two for supply and return of hot water and two for supply and return of chilled water. Joseph Technology Inc. investigated the use of a three-pipe system (a common return pipe for both the hot and chilled water). This strategy promises significant initial cost savings from reduced requirements for piping, pumps, heat exchangers, and storage tanks. However, it can result in additional energy usage. DOE provided $70,000 partial funding (44%) for this project.

- **Project activity:** Investigators at Joseph Technology Inc. conducted research necessary for developing a three-pipe DHC system with a once-through domestic hot water supply. One pipe supplies hot water for heating and domestic use; the second supplies chilled water; and the third is a common return. The system further reduces cost by the elimination of user heat exchangers and the essentially open cycle in which it supplies hot water.

- **Results achieved:** Joseph Technology researchers have:
  - Found optimum temperatures, heating-to-cooling ratios, and operating parameters for a once-through hot water system.
  - Developed preliminary design criteria for a three-pipe system.

4. Heat loss measurements for underground piping in place

Estimations of heat losses and gains in underground piping can be vital for optimum design of insulated piping networks. Also, these estimations can be quick indicators of significant deterioration of system components and materials. Previously, no accurate and easily used method existed for measuring heat loss or gain in underground systems for distributing hot water, steam, or chilled water. Also, lack of field test data impeded verification of formulas and models for heat loss calculations. At the National Institute of Standards and Technology, researchers have sought a method for obtaining the measurements and estimates. DOE provided funding for the project initially, and the project has continued under private sector support.

- **Project activity:** The researchers developed an automated, microcomputer-controlled instrument and data acquisition system to measure thermal conductivity and to continuously monitor earth temperatures in the vicinity of buried underground piping. They employed this equipment in selected piping systems. The technique converts the earth temperature profile into heat loss values by means of heat transfer theory, the nonlinear squares technique, and the measured heat conductivity of the surrounding soil.

- **Results achieved:** The researchers have:
  - Constructed and field tested the instrument/data acquisition system.

5. Reinsulation testing and installation, in place, in underground DHC piping systems

In most older district heating systems, inadequate or aged insulation allows greater heat loss from underground piping than is economically acceptable. Also, the hot pipe surfaces vaporize the ground water and lead to rapid corrosion of pipe surfaces. In a project funded by DOE, at a cost of $50,000, GPX Inc. investigators sought solutions to these problems.

- **Project activity:** The researchers tested new techniques for inspecting underground DHC piping, in place, for defective insulation; for repairing defective insulation; and for installing new insulation.
- **Results achieved:** The researchers:
  - Developed and tested a robot-based infrared sensor to inspect DHC piping in place.
  - Tested piping insulation material for thermal conductivity, water resistance, mechanical properties, accelerated aging, and injection length.
  - Developed a specific formula, specifications, and material safety data sheets for the insulation material and its installation.
  - Tested installation techniques and determined excavation requirements.

6. Renovation of existing systems

Many older district heating systems in high-density areas in U.S. cities have deteriorated to the point where they are no longer economical. Their rehabilitation could lead to center city revitalization. In a project funded by DOE, Burns and Roe Inc., A.E. Peters and Associates, and the Community Central Energy Company investigated DHC rehabilitation opportunities.

- **Project activity:** The researchers assessed the technical and economic feasibility of modernizing older district heating systems through the application of modern technology. They sought to use local energy resources, and to retrofit distribution and end-use systems to improve operating efficiency.
- **Results achieved:** The researchers:
  - Completed a comprehensive engineering and economic assessment of the Scranton, PA, district heating system and established baseline operating characteristics.
  - Identified the most promising options for renovation activities. For each, they performed a preliminary design, provided a cost estimate, and conducted an economic analysis.

7. Vacuum steam radiator performance

Because many potential DHC customers have steam radiators as part of single-building steam heating systems, and replacing these radiators in conversions to new DHC systems can be costly, continued use of the steam radiators would be economically advantageous. Vacuums allow steam to condense at lower temperatures, resulting in more heat transfer to the heated space. In a project funded in part by DOE, Pequod Associates Inc. has investigated this possibility.

- **Project activity:** The researchers evaluated radiator performance with pure steam at normal operating temperatures, at normal and at reduced (subatmospheric) pressures. Evaluation of the subatmospheric system is particularly important, because leaks and the resulting contamination of the steam by air can lead to significant system performance problems and control losses. Also, they sought measures to reduce the effects of the air contamination. The second phase of this project involves investigating the technology on a wider scale.

- **Results achieved:** The researchers installed, operated, and monitored a pure steam heating system, operating at normal and reduced pressures. They found that:
  - Steam systems can maintain performance at extremely low pressures at temperatures above 150°F (65.6°C), even with leaks in the pipes and radiators.
  - Below 150°F, the circulation deteriorates because of density differences and capacity drops.

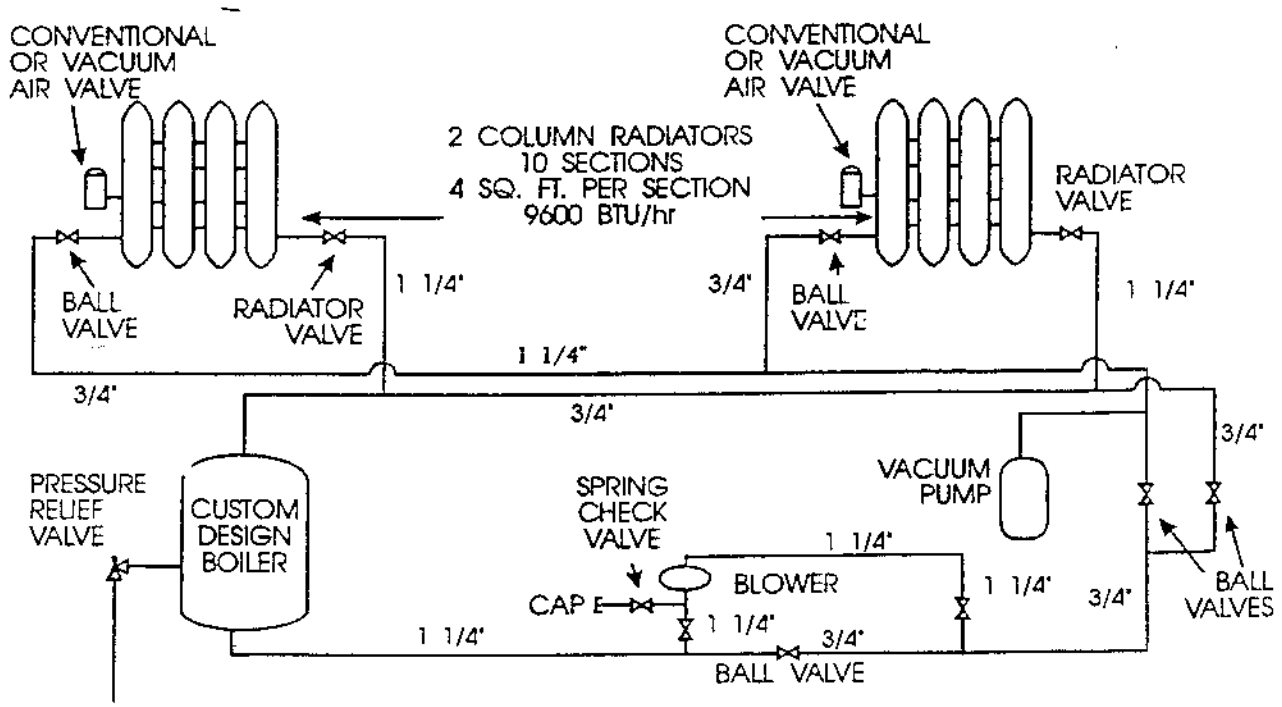

Vacuum steam radiator system (based on figure from Pequod Associates Inc.)

(2) Thermal energy production improvements

The table below summarizes R&D projects in the area of thermal energy production improvement.

RESEARCH AND DEVELOPMENT PROJECTS Thermal Energy Production Improvements			
Project	Project Participants	Nature of Research and Development	Salient Results
1. Advanced absorption chiller	Brookhaven National Laboratory; Puraq (56% DOE funding)	Development of single effect heat-actuated ethylene/water absorption chiller for making ice slurries	Completed design of absorption chiller
2. Heat-actuated, desiccant-based cooling systems — an assessment	Tecogen Inc. (85% DOE funding)	Evaluation of use of heat-actuated, desiccant-based cooling system using district heating system as heat source	Investigated cooling cycles, major components, studied use in buildings
3. Jet refrigeration	Brookhaven National Laboratory (50% DOE funding)	Investigation of refrigeration by jet thermal chilling	Designed, built, and pressure tested jet nozzle
4. Mine water heat recovery	A.E. Peters and Associates (100% DOE funding)	Investigation of feasibility of extracting thermal energy from mines	Demonstrated feasibility on small scale
5. Modular cogeneration development	Brookhaven National Laboratory (100% DOE funding)	Analysis of use of modular cogeneration systems in DHC systems	Completed analysis
6. Open-cycle heat pump	Tecogen Inc. (100% DOE funding)	Evaluation of use of quasi-open-cycle steam/water heat pumps extract heat from low-grade sources for DHC	Found that these heat pumps are technically/economically feasible for DHC
7. Rankine heat pump	University of Maryland, Dept. of Mechanical Engineering (94% DOE funding)	Determination of potential performance of Rankine cycle heat pump	Completed experimental model, developed computer model
8. Thermal cooling cycles with cogeneration	Brookhaven National Laboratory (DOE funding)	Study on use of thermal cooling cycles for cogeneration	Assessed bottoming cycle turbine for powering refrigerating compressor

1. Advanced absorption chiller

Brookhaven National Laboratory (BNL) and the Puraq Company are developing a heat-actuated cooler that will be able to use low-cost waste heat as the energy source. The development of such technology is of economic benefit to district cooling, cogeneration, and engine-driven cooling systems. Funding has been provided by DOE, which has contributed $150,000; Eastman Kodak Company, which has contributed $50,000; and by the New York State Energy Research and Development Authority, which has contributed $70,000. This project has been transferred to the DOE program for energy-related inventions.

- **Project activity:** BNL and Puraq investigators have sought to develop a 200-ton single effect heat-actuated ethylene/water absorption chiller for making ice slurry. The energy source for this device would be 120°C water or steam. After constructing the device, the researchers will test it and investigate ice slurry transport and storage. They will add a transport line and diurnal storage system for the ice slurry. The entire system will be installed at BNL, where researchers will assess its performance.

- **Results achieved:** The researchers have completed the design of the advanced absorption chiller.

2. Heat-actuated, desiccant-based cooling systems — an assessment

Customers usually want, or even need, to heat and cool rooms simultaneously, thereby making it difficult for a developer to install a simple dedicated DHC system and minimize the initial investment. In a project mostly funded by DOE, researchers of Tecogen Inc. investigated the feasibility of coupling a district heating system with on-site heat-actuated cooling modules.

- **Project activity:** Tecogen investigators have evaluated the use of low-grade heat-actuated, desiccant-based cooling systems for lowering temperature and humidity. District heating systems supply the energy for these cooling systems.

- **Results achieved:** Tecogen researchers have:

  - Evaluated cooling cycles of solid- and liquid-based desiccant systems.

  - Investigated critical subsystems and areas of potential component development.

  - Studied the actual use of this cooling system in four buildings.

  - Completed a marketing study of potential customers.

3. Jet refrigeration

By eliminating the moving parts of a conventional compressor, and allowing the use of non-CFC refrigerants, jet refrigeration promises to be an inexpensive and reliable method for cooling the fluid in district cooling systems. Although the coefficient of performance (COP) of the jet device is low, it uses low temperature heat, of which there is an abundance and which is generally wasted. Thus, it has the potential of replacing electricity now used for refrigeration by heat obtained from simple conservation measures in already active thermodynamic machines and processes. In jet refrigeration, a high velocity gas passing over the aperture of the refrigerant container reduces the pressure in the container. The reduced pressure enhances refrigerant evaporation, and cooling takes place as the evaporating refrigerant absorbs the heat required for the phase transition and carries out this heat out the container. DOE has provided $85,000 in FY 1990 for this project, and Modular Cogeneration Corporation has cofunded it.

- **Project activity:** In the Energy Efficiency and Conservation Division of the Department of Applied Science of Brookhaven National Laboratory, researchers began investigating the use of jet refrigeration for district cooling when computer modeling revealed jet nozzle design possibilities that would produce unusually large COP (about 0.6, as compared to the more typical 0.25). To reduce harm to the environment, ammonia is to be the refrigerant. In September 1992, the researchers will first test the system with water as the refrigerant and steam as the driver to obtain qualitative knowledge of the cooling effect. Then, with ammonia as the refrigerant, they will obtain more quantitative results. Initially, the jet is to be of steam, but, eventually, waste heat from an internal combustion engine is to power the system.

- **Results achieved:** BNL researchers have:

  - Designed, constructed, and pressure tested the jet nozzle.
  - Constructed the most elaborate components of the evaporator and condenser.
  - Composed roster of transducers to record system status at critical points in the cycle.
  - Laid out system of pumps and piping.

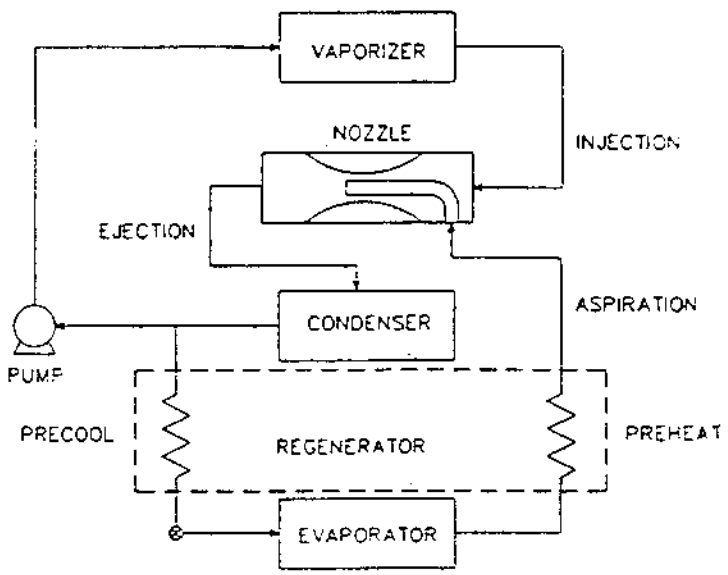

Jet refrigeration system (source: Brookhaven National Laboratory)

4. Mine water heat recovery

Groundwater thermal energy sources have served residences and smaller commercial establishments successfully. The use of underground water resources for DHC offers potential capability for economically extending the use of this energy source. A.E. Peters and Associates has investigated the feasibility of employing the thermal energy from the water from mines for DHC. DOE has funded this project ($468,000 in Fiscal Years 1988-1990).

- **Project activity:** The researchers sought to establish the feasibility of extracting thermal energy from flooded underground caverns, such as mines, for use in DHC systems. They drilled four 6-inch wells into flooded coal mines at the Stauffer Industrial Park, in Lackawana County, Pennsylvania; installed U-shaped heat exchangers; and conducted tests. They plan to develop a hot water district heating system using mine water and heat pumps.

- **Results accomplished:** The researchers have:

  - Proved feasibility of using mine water heat recovery system for DHC, with some modifications.

  - Developed large bundled heat exchanger.

  - Progressed to 18-inch well.

  - Tested heat exchanger with surface water.

  - Coupled heat exchanger to commercial-scale vapor-compression heat pump.

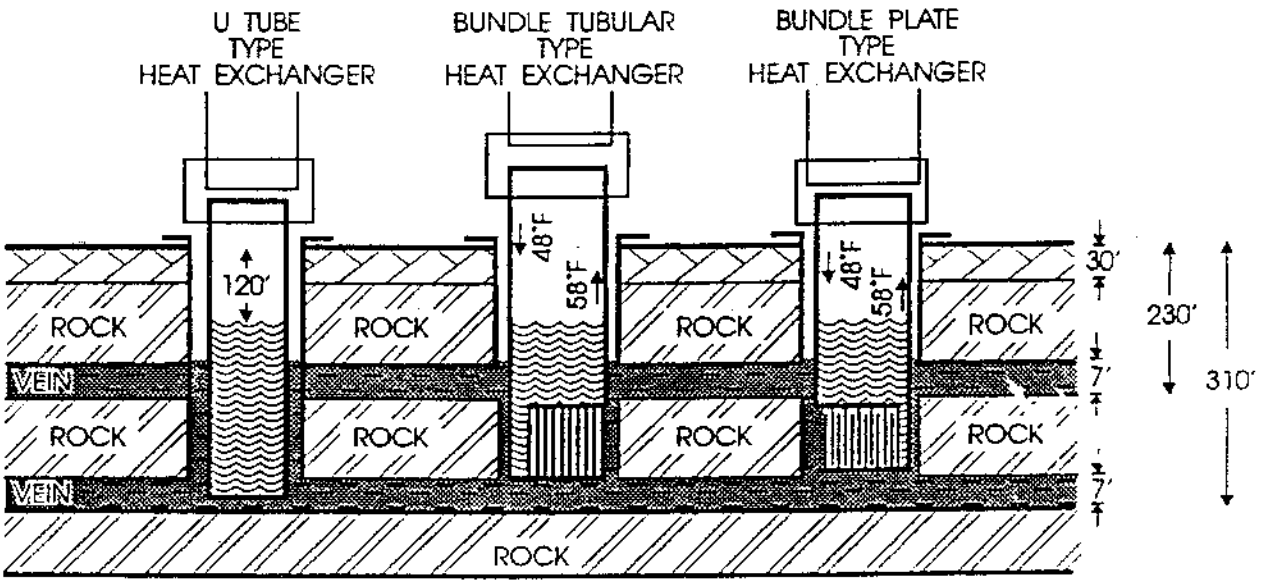

Three types of heat exchangers for extracting heat from mine water (source: A.E. Peters and Associates)

5. Modular cogeneration development

The large capital costs and the long lead times that large central energy production facilities require often deter broader DHC development. Smaller, modular cogeneration units promise to overcome this deterrence, because the smaller, modular units enable tailoring energy production to staged DHC infrastructure development. In this type of system development, smaller areas are converted to DHC independently and then linked to larger systems. At Brookhaven National Laboratory, researchers investigated this concept. DOE provided $200,000 towards this project.

- **Project activity:** BNL researchers analyzed the modular cogeneration concept to determine the breadth of application and to identify research needs. In particular, the researchers evaluated and sought to enhance the effectiveness of DHC systems that obtain their source heat from 0.1 to 10 MW(e) cogenerators distributed throughout the communities served. Relative demand for heating and cooling varies widely between regions and building types. In addition, different cogeneration configurations differ considerably with the type of energy output, fuel requirements, and operating regimes. For this reason, the researchers needed to define the types of modular cogeneration systems that are best suited to the potential users. The researchers chose applications meriting further analysis and system design improvement, to be conducted in conjunction with municipalities or utilities. Also, they pursued opportunities for enhancing modular cogeneration effectiveness through technology development with private-sector partners.

- **Results achieved:** BNL researchers have:
  - Identified additional research needs in the areas of:
    - (a) Thermal linkage of cogenerators
    - (b) Institutional factors analysis
    - (c) New electric generation planning methodologies for utilities
    - (d) Reduction in NO_x emissions from diesel engines
  - Completed the study on the technical and institutional aspects of cogenerators in conjunction with DHC, for energy conservation for both cogeneration and DHC systems.
  - Identified study areas that could further the effectiveness of modular cogenerator use.

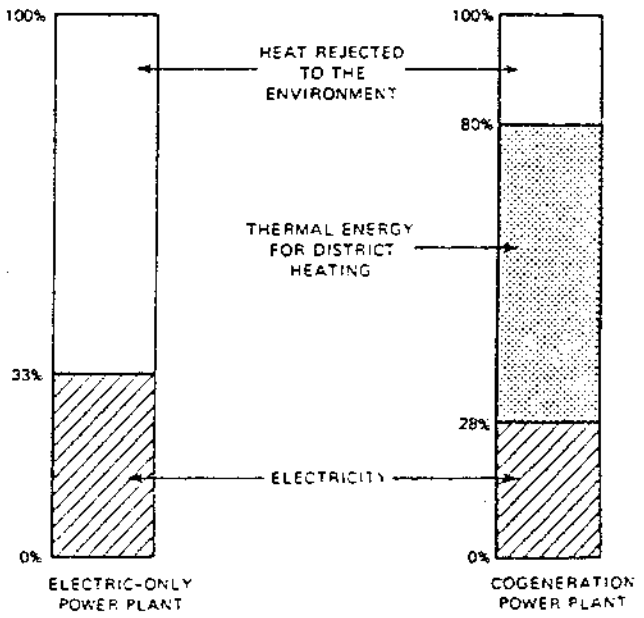

Fuel use comparison between electric-only and cogeneration power plants (source: Oak Ridge National Laboratory)

6. Open-cycle heat pump

In a project funded by DOE ($149,000), Tecogen Inc. evaluated the use of a quasi-open-cycle steam/water heat pump system as a means for recovering low-grade heat from water resources such as sewage ponds, flooded mines, or aquifers, and from waste heat rejected by commercial and industrial processes or electricity generation. Recovery of low-grade waste heat by quasi-open-cycle heat pump technology, in combination with low-temperature-difference heat exchanger technology, represents a viable approach toward making district heating economically attractive in many applications. This technology is superior in terms of its potential thermodynamic performance, cost, and environmental safety as compared to more typical closed-cycle heat pumps based on organic refrigerants such as CFCs.

- **Project activities:** The researchers identified and evaluated quasi-open-cycle steam/water heat pump configurations; evaluated critical subsystems, components and controls, and identified potential problem areas. They recommended areas of development needed to progress to pilot and commercial scale testing.

- **Results achieved:** The researchers:

  - Found that open-cycle heat pump systems are technically and economically feasible for DHC applications, with a payback of 3-4 years.

  - Identified an appropriate site on which to integrate the open-cycle heat pump into an already existing district heating system and completed a study on all the aspects of the integration.

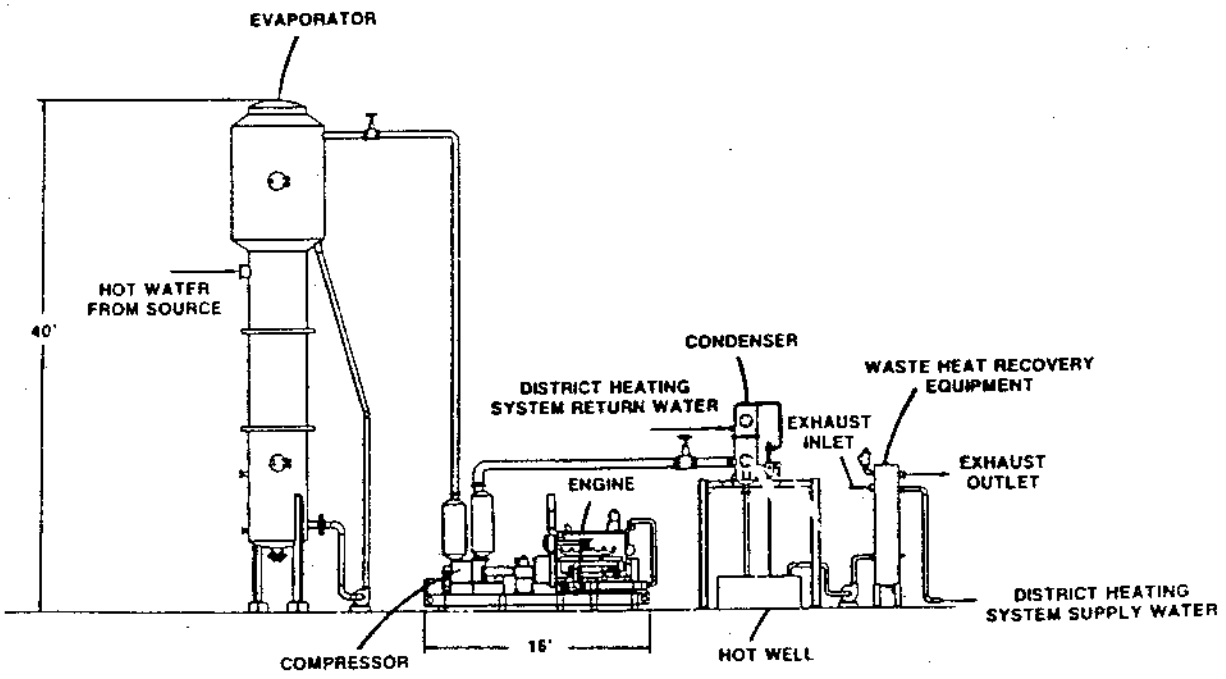

Quasi-open-cycle heat pump district heating system (source: Tecogen Inc.)

7. Rankine cycle heat pump

At the University of Maryland, mechanical engineering researchers developed a modified vapor compression heat pump for DHC use. Because of significantly reduced pressure ratios, heat pumps with two-solution circuits can overcome large temperature lifts at higher coefficients of performance than in more conventional systems. A district heating plant using this heat pump can achieve 70% more efficiency than conventional boilers can. DOE provided most of the funding ($65,000 in Fiscal Years 1989 and 1990).

- **Project Activity:** The researchers developed an experimental model of a Rankine cycle heat pump and investigated its performance potential. The model uses a water-ammonia mixture as the working fluid. The heat pump can supply simultaneous or alternative heating and cooling. Besides the higher temperature lifts and the higher coefficient of performance, other advantages of this device are the extended heat pump range, the wide range of capacity control for constant displacement compressors, and the adjustable temperature intervals.

- **Results achieved:** Investigators at the University of Maryland have:
  - Completed the development of the experimental model of a Rankine cycle heat pump with a two-stage solution circuit and a 10-kW capacity.
  - Conducted single-stage tests. They have collected experimental data to verify the feasibility of the device for DHC applications.
  - Developed computer models of the device and checked the accuracy of the models with experimental data.

8. Thermal cooling cycles with cogeneration

Researchers in Brookhaven National Laboratory's Energy Efficiency and Conservation Division investigated the advantages of using a bottoming cycle turbine in conjunction with cogeneration for cooling. Heat from a generator/turbine would power the bottoming cycle turbine, which would in turn power a compact refrigerating compressor with a high coefficient of performance. Thus the compressor would consume waste heat instead of electricity. DOE funded this project.

- **Project activity:** The researchers assessed a bottoming cycle turbine running on a Rankine cycle. The work fluid would be 15% water and 85% trifluoroethanol. As is typical of Rankine cycles, the fluid would undergo phase transitions between liquid and solid and would be superheated part of the time. The researchers calculated the efficiency of this engine and compared the efficiency to that of a similar engine using Freon 114 as the working fluid.

- **Research achieved:** The researchers concluded that:
  - The bottoming cycle turbine with the trifluoroethanol solution would be more efficient than the turbine with Freon 114.

(3) Analytical tools

See the table below for a summary of the projects discussed in this category.

RESEARCH AND DEVELOPMENT PROJECTS Analytical Tools			
Project	Project Participants	Nature of Research and Development	Salient Results
1. Analysis of district heating and cooling systems	Brookhaven National Laboratory (100% DOE funding)	Computer-aided comparison of various DHC systems in various climates	Developed computer model for comparisons, conducted studies with the computer model
2. Guidebook for district heating development	Washington State Energy Office (DOE funding)	District heating planning/ assessment guidebook	Completed guide now available to communities
3. HEATMAP	Washington State Energy Office (DOE funding)	Software package for DHC analyses	Completed computer program now available to communities
4. HEATPLAN and RELCOST	Washington State Energy Office (DOE funding)	Software packages for DHC analyses	Software packages, available to communities, have saved excessive study costs
5. High-efficiency DHC/cogeneration systems using renewable energy sources	Brookhaven National Laboratory (100% DOE funding)	Study on options for implementing advanced DHC technology	Study presents conclusions and recommendations for DHC implementation
6. Power plant retrofit for DHC	DOE, Public Service Electric and Gas Co., Stone and Webster Engineering Corp., and Westinghouse Electric Corp.	Development of method for converting electric generating plants to include district heating	Have provided detailed conversion method; determined feasibility of DHC retrofit

1. Analysis of district heating and cooling systems.

At Brookhaven National Laboratory (BNL), researchers conducted an analysis that extensively compared various DHC systems in various climates. This analysis is the first of its kind. The findings of this research will enable municipalities and utilities to make comparisons between corresponding features of various district and nondistrict systems and assess the potential of DHC in their territories. Also, the findings will aid in identifying the factors within each DHC system that contribute most to costs and guide in selecting research projects to address these factors. DOE provided funding for this project ($275,000 in Fiscal Years 1989 and 1990).

- **Project activity:** The researchers formulated a conceptual model to treat a wide variety of district heating, cooling, and heating and cooling — especially the systems they considered. Of the systems they studied, they selected nine for more intensive analysis. For the analysis, they developed a computer model that incorporates their conceptual model. The software runs on an IBM-compatible personal computer with a hard disk. They programmed the model, itself, in FORTRAN, with a menu program, which they programmed in BASIC. They maintained the input parameters in a database of several files. With the computer model, they characterized the nine specific DHC systems for a wide range of heating and cooling loads. In the next stage, they surveyed market potential and penetration methodologies and identified those feasible for assessing DHC systems. Then they examined prototypic communities for candidates for a market study to assess the feasibility of DHC and selected the most promising ones. Of these, they selected two for further study: Milwaukee, WI, for its high heating loads, and Austin, TX, for its high cooling loads. These cities were also favored for their superior data bases.

- **Results achieved:** In this project, BNL researchers have:
  - Developed a DHC analysis computer model to compare alternative system types.
  - Evaluated, with the computer model, ice slurry district cooling under general climate conditions and building load densities.
  - Assessed, with the computer model, the potential of DHC in specific municipalities, including Milwaukee, WI, and Austin, TX.
  - Prepared maps, of the selected municipalities that show the areas in which each DHC system proves economical.
  - Analyzed potential of DHC in retrofitting existing power plants.
  - Assessed the potential of DHC with regard to using municipal solid waste as fuel.

2. Guidebook for district heating development

To become fully developed as a technology, district heating must overcome regulatory, financing, and market entry barriers, as well as technical ones. District heating's extreme capital intensive nature often complicates financing and initial market competitiveness. State and local regulatory policy further hinder overcoming these barriers. In a project funded by DOE, the Washington State Energy Office (WSEO) developed the two-volume *District Heating Development Guide* (first printing, June 1987) to aid communities in district heating assessment and planning.

- **Project activity:** Volume I of the guide briefly summarizes technical considerations that a district heating feasibility study must address. It discusses in detail the legal, regulatory, institutional, and marketing issues important for a complete assessment. Volume II is a model for district heating feasibility studies and a manual for using WSEO's software package HEATPLAN.

- **Results achieved:** The guide now aids communities in district heating and planning by providing information on:

  - District heating benefits
  - Community planning
  - Production and distribution
  - Marketing
  - Ownership and operation
  - Financing
  - State Regulations of district heating systems
  - District heating franchise agreements
  - Supplier/customer agreements
  - Customer systems
  - District heating feasibility study methodology
  - How to use the HEATPLAN computer program

3. HEATMAP, a graphical computer analysis program

T+VE (of Sweden), LICconsult (of Denmark), and Criterion, contractors for the Washington State Energy Office (WSEO), have developed a computer program, HEATMAP, for DHC analysis. Besides WSEO, DOE is one of the computer program's sponsors and has contributed to the funding. Other sponsors include the New York State Energy Research and Development Authority, U.S. Department of the Navy, the Swedish Council for Building Research, and the City of Chicago.

- **Project activity:** HEATMAP is a graphical analysis program for use with an autoCAD package on an IBM-compatible personal computer with an 80386 microprocessor, math coprocessor, and mouse or digitizing tablet. Pull down menus and on-line help facility operation. HEATMAP enables users to analyze the feasibility of proposed systems, track performance of existing systems, assess expansion of existing systems, evaluate hot water, steam, and chilled water distribution systems, and determine environmental benefits.

- **Results achieved:** WSEO and its contractors have completed the development of HEATMAP, and WSEO offers this software to communities for DHC planning and analysis. The program performs the following services:

  - Eliminates the need for extensive data gathering. With the data it already contains, it calculates heating and cooling loads, distribution system size and cost, optimum production plant sizes and costs, and consumer costs.

  - Gives easy access to DHC system information with databases for consumer heating and cooling loads, air emissions, production plants, distribution systems, and economics.

  - Aids system performance analysis and consumer load projection by tracking detailed information on each consumer, including HVAC equipment, energy use, ownership, and operation.

  - Enables environmental impact comparisons between DHC and traditional systems through calculating such environmental factors as air emissions and fuel use.

  - By linking the data base to the project map, it allows access to data base information simply by locating the facility on the map.

4. HEATPLAN and RELCOST

Besides HEATMAP, WSEO offers communities other software packages for DHC considerations: HEATPLAN and RELCOST.

- **Project activity:** The Swedish engineering firm VBB developed HEATPLAN for the Swedish Council for Building Research and WSEO. This program consists of three modules: heat load and distribution, production, and economics. It uses customer heat load density and service cost as bases for helping users to determine the favorability of a given locality for DHC adoption or to target localities favorable for more intensive study. RELCOST performs preliminary life-cycle cost analyses on currently existing or proposed alternative energy systems.

- **Results achieved:** Communities have used HEATPLAN and RELCOST for several years in their DHC planning or assessment and, with these programs, have avoided considerable study costs. These software packages have encouraged communities to consider DHC adoption.

5. High-efficiency DHC/cogeneration systems using renewable energy sources

In a projected funded by DOE, Brookhaven National Laboratory conducted a study on the need and opportunity for high-efficiency, renewable community energy systems.

- **Project activity:** The study provided an analysis of the justification, strategies, and technology options for implementing advanced DHC systems in the United States. It investigated the need for these systems in terms of global warming, ozone depletion, and the need for a sustainable energy policy. The researchers then formulated strategies for implementation in the context of the Public Utilities Regulatory Policies Act (PURPA) and planned new institutional arrangements.

- **Results achieved:** The report on the study, *Cogeneration and Beyond: the Need and Opportunity for High Efficiency, Renewable Community Energy Systems*, presented conclusions and recommendations in the following areas:
  - Institutional and regulatory strategies for DHC/cogeneration implementation
  - Advanced block-scale DHC/cogeneration technology R&D issues
  - Advanced district cooling technology R&D needs and opportunities
  - Renewable district cooling sources: free cooling with cooling towers and spray ponds, aquifer chilled water storage, ice pond technology, radiative cooling, solar absorption chilling, and use of cold surface waters
  - Renewable district heating resources: solar district heating, biomass energy sources, and sewage water with heat pumps

6. Power plant retrofit for DHC

In a project sponsored by DOE and the Public Service Electric and Gas Company, G.T. Kan of Stone and Webster Engineering Corporation (Boston, MA) and G.J. Silvestri, Jr., of Westinghouse Electric Corporation devised a method of modifying a coal-fired electric unit to extend it to include a hot water district heating system.

- **Project activities:** The engineers conceived a modification of an actual power plant system that changed the turbine crossover piping and inserted a bypass heater train. The design added two backpower turbines to be connected to the modified turbine crossover piping. Butterfly pressure control valves would govern the amount of steam extracted for the district heating system. Computer simulation established correlations between various pressures and flows and aided in determining design parameters. The engineers compared the chosen design with one having no backpressure turbines and estimated the fuel saving of the chosen design over that of the alternative.

- **Results achieved:** In this project the engineers:

  - Developed a method for the retrofit.

  - Determined that their design would save more fuel costs than would one without the backpressure turbines.

  - Found their design to be technically feasible, with a large potential district heating source, with only minor modifications to existing generating plants and minor electric capacity losses.

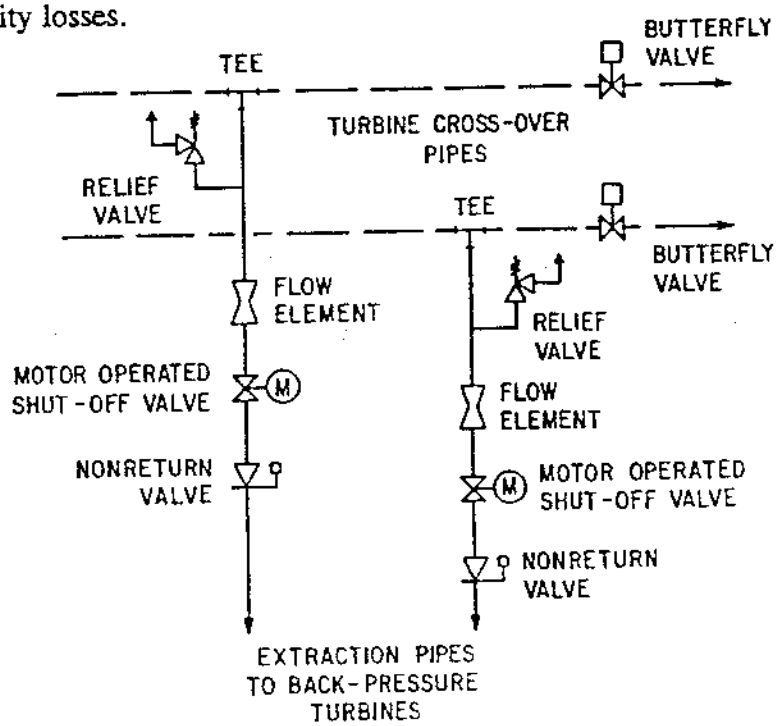

Crossover steam extraction piping (source: Stone & Webster Engineering Corp.)

(4) The International Energy Agency (IEA) program on DHC

In 1974, several countries, including the United States, formed the International Energy Agency (IEA) to promote cooperation among themselves on energy-related matters. DOE cooperates closely with the IEA. In one element of IEA's International Energy Program, the participating countries undertake cooperative activities in energy research, development, and demonstration.

The IEA sees DHC as a means by which countries can decrease their oil dependence, improve their energy efficiency, and improve the quality of the environment. Nine countries, including the United States, participate in IEA's program of Research, Development, and Demonstration on District Heating and Cooling, which began in 1983 with 10 countries. The program has had three phases, or annexes. Annexes II and III are extensions of the program instituted by agreements between the countries continuing the participation.

Participating countries, including the U.S., submit recommendations for research designed to improve the efficiency, economics, and market acceptance of DHC technologies. If a research topic is accepted, a member country is selected to lead the research effort in that area. The results are disseminated to all IEA members.

Major recent accomplishments include:

- Advanced fluids. The U.S. is the lead country in this work, which includes ice slurries, friction reducing additives, corrosion inhibitors, system modeling, and data collection. All these activities are coordinated with DOE research in DHC discussed in this report. A summary report was produced in the spring of 1990.

- Advanced heat production. A report by Sweden, "Advanced District Heating Production Technology", was distributed in October 1989. A U.S. study on user-friendly turbine selection was completed in 1990.

- Building conversion to hot water district heating systems. A report from Canada with U.S. assistance, was distributed in 1990.

- Telemetry. A technology review of DHC utility applications for advanced communications was completed by Canada in 1990.

- Environmental Impacts. A booklet on environmental advantages of DHC was prepared. A task on environmental aspects of DHC was led by Denmark.

- Reports. The IEA published reports in 1989 on "Static Problems in the Laying of Plastic Jacket Pipe" and "Fittings in the Laying of Plastic Jacket Pipe".

- The "District Heating and Cooling Project Review" was published in 1989.

The tables that follow present the work done in the three annexes.

IEA DISTRICT HEATING RESEARCH, DEVELOPMENT, AND DEMONSTRATION

Annex I, 1983-1987

Subject Area	Country Conducting Project	Project
Conversion of building heating systems for connection to district heating systems	United States	Guidelines for conversion of building heating systems for connection to district heating systems
Heat meters	Netherlands	Market survey of heat meters
		Field experience with small heat meters
		Functional requirements of small heat meters
		Course in heat metering
	Norway	Dynamic response of heat meters to flow and temperature variations
	Denmark	Minimum temperature difference in residential heating
	Germany	Laboratory testing of small heat meters
		Simulated field tests of small heat meters
		Report on small heat meters
Heat production including combined heat and power	United States	State-of-the-art technology review of small coal-fired boilers
	Denmark	Conceptual design of 10-MW fully automated coal-fired district heating plant
	Sweden	Small-scale combined heat and power plants
Low-cost distribution systems	Sweden	Cost analysis of prefabricated plastic culverts
	Germany	Technical and economic assessment of new distribution technology
Low temperature heat sources in district heating system	Sweden	Heat pumps and low temperature heat sources for district heating
		35-MW heat pump at Järfälla, Sweden (videotape)

IEA DISTRICT HEATING
RESEARCH, DEVELOPMENT, AND DEMONSTRATION
Annex II, 1987-1990

Subject Area	Lead Country	Project
Advanced district heating production technologies	Denmark	Advanced district heating production technologies
Advanced energy transmission fluids	United States	Hydraulics characteristics of ice slurry and chilled water flows Impact of friction reduction additives on corrosion, contamination and interactions with other additives in district heating systems Hydraulic network simulation for the use of drag reducing additives in district heating systems Friction reduction additive data collection Advanced fluids for district heating and cooling energy transmission
District heating and cooling R&D projects review	Denmark	District heating and cooling R&D projects review
Guidelines for converting building heating systems for hot water district heating systems	Canada	Guidelines for converting building heating systems for hot water district heating systems
Heat meters	Norway	Heat meters — data acquisitions and automatic self-diagnostic systems Heat meters — field test equipment Heat meters — information project on R&D Small heat meters
Piping technics for district heating	Germany	Fittings in plastic jacket pipelines New methods in underground engineering and installing of district heating pipelines Static problems in the laying of plastic jacket pipes Welded sleeves technique for plastic jacket pipes
Potential telemetry technology for district heating	Canada	Potential telemetry technology for district heating
Thermal energy from refuse analysis	United States	Thermal energy from refuse analysis

IEA DISTRICT HEATING RESEARCH, DEVELOPMENT, AND DEMONSTRATION

Annex III, 1990-1993

Subject Area	Lead Country	Project
Advanced transmission fluids	United States	Environmental effects due to surfactant friction reduction additives
		Performance tests on plate-fin heat exchangers with friction reduction additives
		Development of system design guidelines for ice slurry applications
		Corrosion testing
Consumer heating system simulation	Norway	Development of dynamic simulation models of consumer heating system to ensure proper system design and correct control system functioning.
District energy promotion manual	Canada	Gives practical assistance to promoters and developers attempting to solicit support for new, expanded or modernized DHC system
District heating and the environment	Denmark	Brochure, "A Clean Solution? It Is Also Your Responsibility."
		Report, *IEA — Manual on the Environmental Benefits of District Heating and Cooling*
		Consequence model to demonstrate environmental benefits when DHC is introduced
Information exchange	Netherlands	Extension of catalog *R&D Project Review* (1989) to include new projects.
Piping	Germany	Plastic jacket pipes with CFC-free foam
		Compression resistant components for plastic jacket pipes to sustain displacements
		Polybutene and polyethylene mesh medium pipes for small-diameter pipelines
Supervision of District Heating Networks	Sweden	Quantitative heat loss analysis by means of thermography

B. Market adoption initiatives

The market adoption initiatives program contains four categories:

(1) **Initiatives for advanced DHC systems:** This category includes some representative projects in which DOE participated and that culminated in construction of facilities, as well as feasibility studies that were conducted to demonstrate the desirability of DHC.

(2) **Technology exchange:** This category consists of DOE's activities to disseminate DHC technology information.

(3) **Collaborative demonstration program:** In this program, several organizations, including DOE, seek to develop advanced fluid district cooling technology.

(4) **Current projects:** This category describes activities on projects which are presently ongoing.

Major District Cooling Systems Show Positive Growth

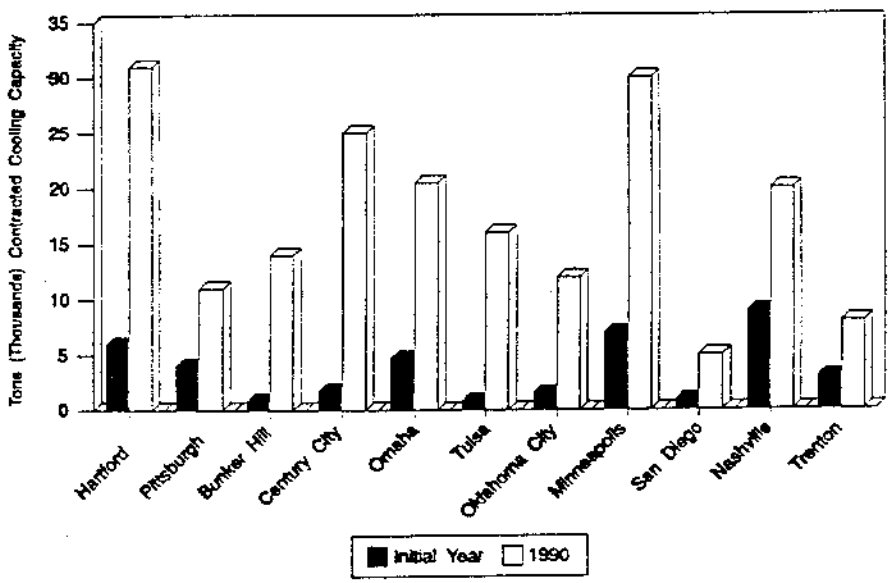

Source: Cleveland Thermal Energy Corporation

Growth of district cooling use in key localities

(1) Initiatives for advanced DHC systems

The following tables summarize projects that were initiatives for advanced DHC systems. Following the tables are descriptions of each project.

MARKET ADOPTION INITIATIVES			
Location	Heating or Cooling	Nature of project	Salient Results
Baltimore, MD	Heating	3 projects: • Development of refuse-burning cogeneration plant • Installation of district heating system in 1800 residences in Cherry Hill • Expansion of district steam system	• Refuse-burning cogeneration plant built; and in service. • Cherry Hill district heating installation complete. • Steam system expansion underway.
Buffalo, NY	Heating & cooling	Technical/economic assessment of proposed DHC system	Study found DHC system feasible; construction began.
Camden, NJ	Heating	Evaluation of district heating opportunities from refuse incineration and from cogeneration plant	Study found use of both heat sources to be feasible; actual construction began.
Chicago, IL	Heating & cooling	Technical/economical assessment of DHC feasibility	Study found DHC systems to be feasible in several places.
Clark University Worcester, MA	Heating	Demonstration of cogeneration use for DHC.	Cogeneration plant saves $250,000 per year.
Des Moines, IA	Heating & cooling	DHC feasibility study.	Study found district heating feasible.
Detroit, MI	Heating & cooling	Development of refuse-incinerating plant for DHC	Facility supplies steam for downtown DHC.
Georgetown University, Washington, DC	Heating & cooling	Construction of DHC/cogeneration system	Completed system heats, cools, and supplies electricity.

MARKET ADOPTION INITIATIVES

Location	Heating or Cooling	Nature of project	Salient Results
Grand Rapids, MI	Heating	Addition of waste-to-energy cogeneration facility to district steam heating system	Completed system supplies heat and electricity.
Little Rock, AR	Cooling	Study for maximization of district cooling system efficiency through application of latest technology	Identified cooling system modifications for increasing efficiency.
Miami, FL	Cooling	Study for local district cooling system.	Completed study gives guidelines.
Minneapolis, MN	Heating & cooling	Modernization/expansion of DHC system	DHC system successfully modernized/expanded.
New Haven, CT	Heating & cooling	Assessment/implementation of satellite concept of DHC systems development	2 energy centers constructed in central business district.
New Orleans, LA	Cooling	Assessment of ammonia refrigeration for district cooling	Ammonia refrigeration found advantageous for district cooling.
Ogden, UT	Heating & cooling	Study of energy use in community	Developed comprehensive energy plan. City council adopted it.
Phoenix, AZ	Cooling	Study of advanced cooling technologies	Established feasibility of various advanced cooling technologies.
Piqua, OH	Heating	Installation of new hot water district heating system for industrial park	Completed both phases of installation.
Provo, UT	Heating	Review of preliminary district heating study.	Initial phase of system installation complete.

MARKET ADOPTION INITIATIVES

Location	Heating or Cooling	Nature of project	Salient Results
Saint Louis, MO	Cooling	Analysis to determine most practical method for developing district cooling system using steam from refuse-to-energy plant	Engineering for district cooling system complete.
Saint Paul, MN	Heating & cooling	Construction/installation of hot water DHC system	System has saved 20%-45% in energy costs.
San Antonio, TX	Heating & cooling	Computer-aided analysis of potential DHC benefits, focused on finding incentives for private DHC development	San Antonic now has several privately owned DHC systems, as well as 2 municipal systems.
San Francisco, CA	Heating & cooling	Urban redevelopment project, including studies for potential DHC use	Progressed to detailed DHC assessment.
Stamford, CT	Heating & cooling	Feasibility study for introducing DHC system in downtown neighborhood	Demonstrated inherent flexibility of DHC.
Trenton, NJ	Heating	Feasibility studies for hot water cogeneration/district heating system	Integrated community energy system complete; has stimulated revitalization of central business district.
Waikiki, HI	Cooling	Feasibility assessment piping offshore seawater to district cooling system	Determined key design details.

1. Baltimore, Maryland project

- **Project activities:** In early 1982, in a study funded by DOE, the City of Baltimore completed an assessment of its District Heating and Cooling (DHC) system. The assessment identified three projects which should be developed further, 1) a reliable and cost-saving thermal energy source owned by the Baltimore Refuse Energy Service Company (BRESCO), 2) the Cherry Hill neighborhood district heating component of the Baltimore District Heating Project and 3) the Hopkins/East Baltimore area Central Avenue DHC system. The BRESCO refuse burning plant was developed and began operation in 1985. The contemporary design of the plant blends well with the modern Baltimore downtown area. Later, the Housing Authority of Baltimore City (HABC) developed the Cherry Hill neighborhood district heating component of the Baltimore District Heating Project. The effort completely converted the 1800 units at Cherry Hill to hot water district heating. The Cherry Hill system began operation in 1987. Recently, the Baltimore Thermal Energy Corporation (BTEC) began improving the Central Avenue System which provides district steam to several public housing developments. This effort was expanded to include three additional large public housing developments, the City Jail, the State Penitentiary, the Church Hospital, and two public schools. These and other expansions are projected to be completed by November 1992.

- **Results achieved:** The following were achieved in the three Baltimore projects.

  1) The BRESCO trash-burning cogeneration plant, which was completed in 1985 at a cost of approximately $254 million, has had the following operational results:

     - Steam is supplied to the downtown DHC loop, which serves over 500 customers.
     - The plant daily processing capability is 2250 tons of refuse per day.
     - The steam flow to the turbine is 510,000 pounds per hour. The plant electrical power capacity is 60 MW(e).

  2) The Cherry Hill homes project had the following operational results:

     - Current estimates indicate savings of over $1 million in utility costs as a result of the Cherry Hill retrofit.
     - A district heating system and residential building conversion effort completely converted the 1800 units at Cherry Hill homes to hot water district heating.
     - The Cherry Hill construction effort included the installation of over 80,000 feet of underground piping, and in-building retrofit for more than 240 buildings.

  3) The Central Avenue System and other connected smaller DHC systems developed by BTEC will add over 540,000 Mlbs. of annual steam sales by the end of 1992.

2. Buffalo, New York project

- **Project activities:** For this 1985 technical and economic assessment, RDA Engineering Inc. identified and described district heating and cooling opportunities for downtown Buffalo. The DOE funded study reviewed technical and economic data necessary to building such a system, including a market study of how many buildings would use the system, energy-price projections, regulations governing such systems, ownership options, expansion proposals, and a plan of implementation.

- **Results achieved:** Several buildings were selected for a survey to develop energy-use profiles. On the basis of the data it was determined that the Buffalo DHC system could be both economical and energy efficient.

  - Advanced piping technology enabled the district heating to compete economically with alternative technologies.

  - All evaluations were made within the context of the downtown energy-use patterns with consideration for the pilot system as well as future expansion.

  - From the study it was concluded that it was feasible to build a pilot-scale system for downtown Buffalo, and to design it with expansion capability.

  - Construction of the project started in late 1986. The project linked several city owned buildings and a nearby private building. The project was based on a common boiler located in a centralized city facility.

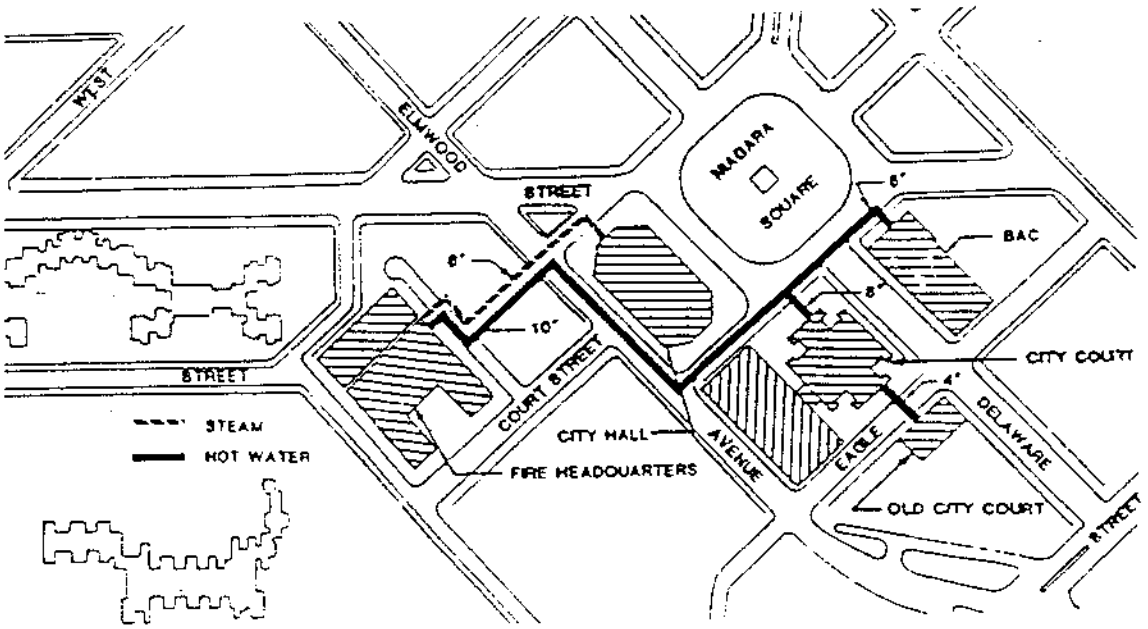

Buffalo, NY, district heating and cooling system plan (source: RDA)

3. Camden, New Jersey, project

- **Project activities:** DOE awarded the City of Camden a grant to evaluate district heating opportunities from a planned 1000-ton-per-day refuse incineration and resource recovery plant. RDA Engineering Inc. worked with Camden in this assessment. In the nearby central business district, a large privately owned industrial cogeneration project was investigated as a potential energy supplier to a DHC loop.

- **Results achieved:** As a result of the evaluation:

  - The Camden County Solid Waste Authority (CCSWA) developed a district heating system that will serve industrial, commercial and residential customers.

  - A project to link the cogeneration plant with a university, hospital, and several office buildings began.

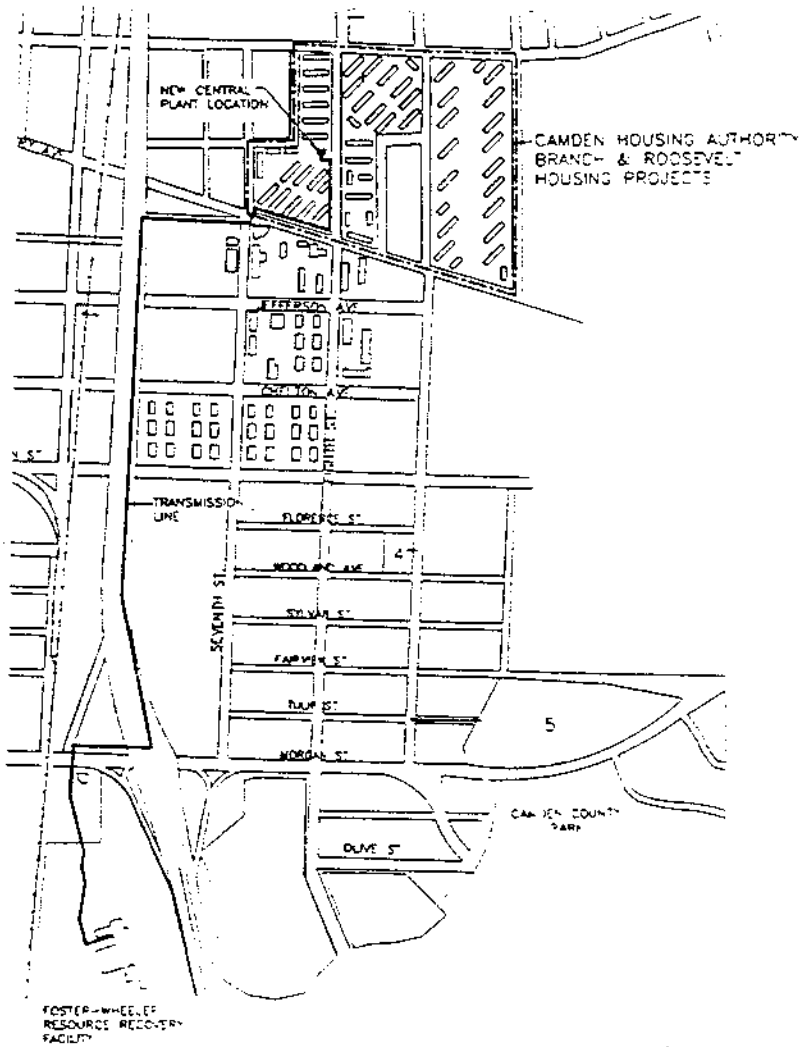

Camden, NJ, project (source: RDA)

4. Chicago, Illinois, project

- **Project activities:** In 1984, the city of Chicago conducted a DOE-funded assessment of community energy conservation opportunities for urban development projects. This study was conducted to evaluate the technical and economic feasibility of district heating and cooling. A method was developed to determine the feasibility of DHC. Then the method was applied to ten DHC technologies and twelve sites within Chicago. The study focused on commercial and mixed-use development. The general target area encompassing the twelve sites of the central business district (CBD) and its surrounding communities was selected due to existing community characteristics which are conducive to DHC. These characteristics included: proposed development and renovation of commercial and mixed-use structures, potentially accommodating infrastructure such as freight tunnels and other conveyances for piping systems, large thermal users, and potentially additional commercial and mixed-use growth.

- **Results achieved:** The results of the analysis of technologies are the following:

  - DHC appeared to have major potential applications in Chicago. Based on present and planned development alone, this study found several sites in the target area where significant energy savings could be achieved through the application of DHC technologies.

  - Eight distinct DHC technologies were identified as being generally feasible for Chicago.

  - For twelve sites evaluated, five sites were identified as being able to support seven DHC technologies.

  - Two sites were found to be suitable for district heating and cooling.

  - One site was suitable for cogenerated district heating and electricity, using steam.

  - One site was suitable for district heating, district heating and cooling, and cogenerated district heating, cooling and electricity.

  - One site was suitable for district heating, district heating and cooling, as well as cogenerated district heating, cooling and electricity.

- Currently, a decision has not been made to build a DHC system.

5. Clark University, Worcester, Massachusetts, project

- **Project activities:** Clark University's Integrated Community Energy System (ICES) was a demonstration model for potential cogenerators and to energy policy makers. It was an example of the benefits to be gained from such plants. From the outset, the project has had financial support from DOE and other agencies.

- **Results achieved:** At Clark, those benefits include the following:

  - Cogeneration at Clark University. Dedicated in 1982, ICES served the DHC community as an example of the kind of research undertaken by the University to translate academic research into practical solutions to current problems involving DHC systems.

  - Fuel savings equivalent to about 360,000 gallons of oil per year.

  - Cost savings projected at about $250,000 for the first year alone, which is expected to increase as the price of fuel rises.

  - Approximately 35 percent of the energy from the system's fuel is converted directly into electricity and an additional 34 percent is recaptured from the engine's exhaust and cooling jacket to be used for heating, air conditioning, and hot water.

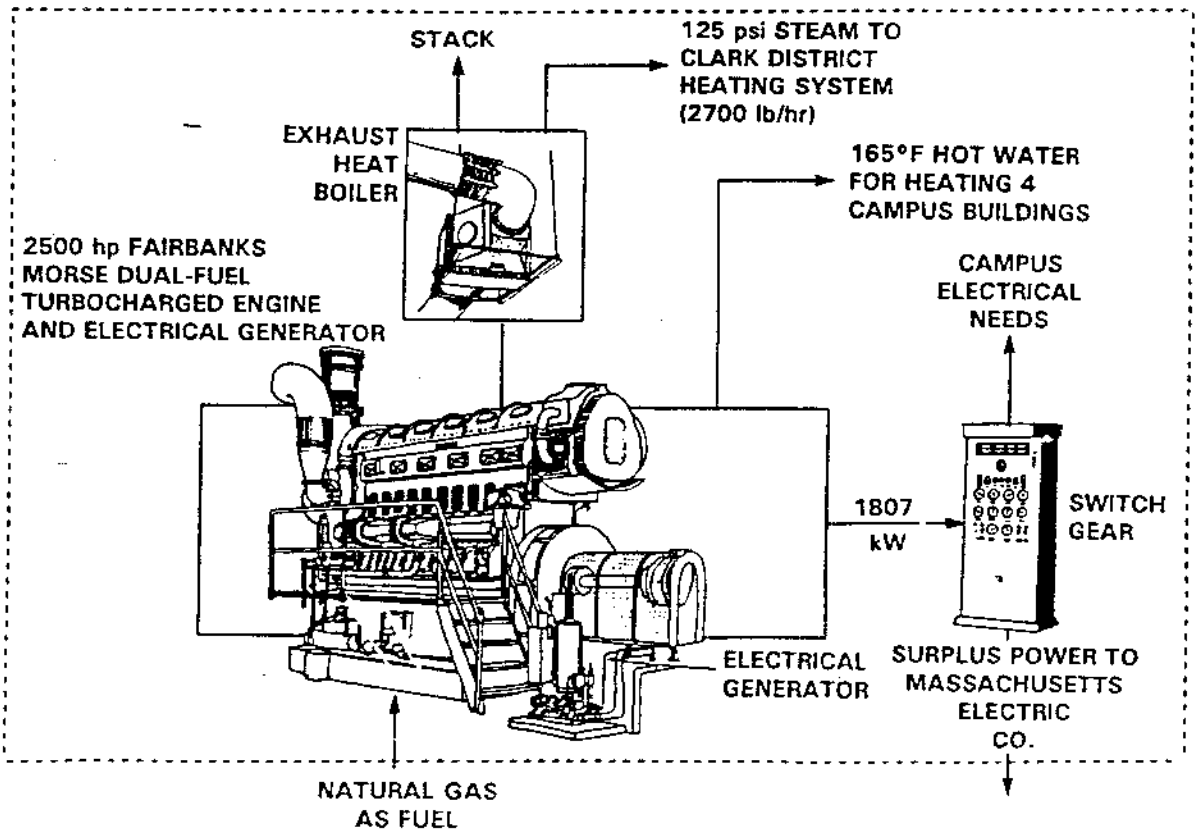

Clark University cogeneration and district heating facility (source: Clark University)

6. Des Moines, Iowa, project

- **Project activity:** In 1987, a DOE funded feasibility study was conducted for district heating and cooling for the city of Des Moines, Iowa. The Design Research Institute of Iowa State University of Science and Technology was named the consultant to serve the city. As part of that contract, EKONO Inc. of Bellevue, Washington, was engaged to provide technical services. The study indicated that district heating and cooling are technically feasible, with the Iowa Power Plant as a primary energy source and with cogeneration and three types of distribution media: high and low temperature water for heating, and chilled water for cooling.

- **Results achieved:** As part of the study, information about the major consumer/producers and downtown buildings larger than 10,000 sq. ft. was collected and processed with a computer analysis. In general, the study showed that district heating is economically feasible, but additional studies are needed for cooling.

  - In order to be economically feasible, the large consumer/producers, such as the Capitol Complex, Drake University, and the four hospitals (General, Lutheran, Mercy, and Methodist Medical Centers), should be included.

  - To help in marketing, piping connections and system conversions in the buildings or groups of buildings should be included in the overall construction project and its financing.

  - It was determined that further consideration should be given to construct the metro refuse burning plant as an additional energy source for DHC, or to have this function take place at the Iowa Power Plant with fluidized-bed boilers.

  - The large consumer/producers can use DHC to reduce the peak load conditions and enjoy reduced interruptible rates.

  - It was pointed out that the Iowa Gas Company could be considered as an alternate energy source, with a downtown location for a DHC plant.

  - The study indicated that the City of Des Moines should proceed with Phase II, Site Specific Feasibility Study, in accordance with the tentative plan submitted in the initial feasibility study.

  - An additional evaluation was performed to assess the feasibility of recommissioning a 210 MW(e) coal fired power plant to be used for cogeneration and to deliver the thermal energy from the power plant to downtown.

7. Detroit, Michigan, project

- **Project activities:** As a result of a previous DOE sponsored feasibility study, in 1985, the city of Detroit developed a Resource Recovery Facility (RRF) for incinerating refuse and recovering heat to produce steam for district heating and cooling.

- **Results achieved:** After a difficult period for getting the RRF facility operating in accordance with environmental regulations the following was achieved:

  - A consortium of private companies was established to own and operate the RRF facility. It disposes of over half the residential and commercial solid waste generated in Detroit, approximately 3,000 tons per day.

  - The RRF facility supplies steam for the downtown district heating and cooling, and electricity to Detroit Edison.

  - The project demonstrated that long-term commitment to DHC is required for success in these types of projects.

8. Georgetown University, Washington, D.C., project

- **Project activities:** Georgetown University's DHC/cogeneration project began in 1982 on a cost sharing contract between Georgetown University and DOE. (DOE provided $1.25 million of the $1.9 million initial budget.) Georgetown University issued the specifications for the system in May 1982 and received final bids in November 1982. In 1984, Turbonetics installed a 2845-kW steam turbine. A coal-fired atmospheric fluidized bed boiler (paid with DOE funds, online since 1979) powers the system, and two gas-fired boilers supplement the heat input. The boilers drive a cogeneration turbine, which drives an electrical generator that delivers power to the electrical grid. During winter operation at maximum load, the turbine generator produces about 25% of the overall electrical demand for the university. The summer output is between 1100 to 1400 kW. The cogenerator turbine supplies heat to the district heating system. Steam from the boilers also drives the chiller for the district cooling system.

- **Results achieved:** The project has accomplished the following:

  - Georgetown University's contractors completed construction of the plant and distribution system. The system supplies heat to the university buildings and, indirectly, provides electrical power for the university.

  - The system has served several utilities, contractors, and students as a model in plant operations and maintenance studies.

  - Currently, Georgetown University is planning for a new cogeneration project that will produce 54 MW of electricity to be sold to the Potomac Electric Power Company (PEPCO). The project will save approximately $750,000 per year.

9. Grand Rapids, Michigan, project

- **Project activities:** In 1986, in a project funded by DOE ($50,000), Kent County, Michigan, assessed the feasibility of adding a waste-to-energy cogeneration facility to its district steam heating system, to serve the area around Grand Rapids.

- **Results achieved:** As a result of the study, the following occurred:

  - The study aided in prioritizing areas for expanding the existing steam system.

  - Construction began on a 625-ton-per-day waste-to-energy cogeneration facility, which delivers 115,000 pounds of steam per hour to the district heating loop and generates 19 MW of electricity. The district heating system serves 320,000 people. The county sells the electricity to a local community utility.

10. Little Rock, Arkansas, project

- **Project activities:** A study at the University of Arkansas for Medical Sciences, for which DOE provided $61,000 (77%), examined ways to maximize the efficiency of the University's district cooling system through applying recent district cooling technology. First, the study formed a baseline for its later stages from the current conditions in the central chilled water plant. Then it searched for the most effective means of supplying the chilled water. The study examined applications of artificial intelligence for system operations to maximize energy efficiency in operating the chillers with the current campus-wide energy management system. Finally, it determined the feasibility of implementing the system in a way to minimize the effects of later building additions.

- **Results achieved:** After evaluating different chiller types, chiller configurations, and possible modifications to the existing distribution system, the study made the following recommendations:

  - Convert the chilled water system from a constant volume to a variable volume type.

  - Use a natural-gas-powered engine as the primary driver for the electric generator.

  - Add friction-reducing agents to the circulating water to allow smaller pipe sizes in connections of new buildings to the district cooling system.

11. Miami, Florida, project

- **Project activities:** In a cost-shared project for which DOE contributed $50,000 of the $70,000 project cost, Burns and Roe Inc. and Joseph Technology Corporation conducted a study on developing a district cooling system for five major hospitals in Miami. The study assessed various district cooling technologies and investigated possible modifications to selected district cooling technologies. New technologies studied included high-efficiency electric chillers, advanced two-state absorption chillers, steam-driven chillers with piggy back absorption chillers, offpeak cooling storage facilities, turbo-ice harvesting, and ice-water slurries. Also, the investigators conducted surveys of prospective customers, cooling loads, and cooling sources among currently existing resources and assessed institutional, financial, legal, and regulatory barriers to district cooling development.

- **Results achieved:** In completing the study, the investigators:

  - Proposed new district cooling technologies to apply and sources to use.

  - Assessed technical and economic feasibility of alternative district cooling projects.

  - Compared alternative cooling systems with conventional cooling technologies in terms of initial cooling costs, total operational life cycle costs, and affect on total cooling costs.

  - Organized District Cooling Assessment Work Group, consisting of representatives from state and county governments, potential customers (the hospitals), power utilities, and consulting engineers.

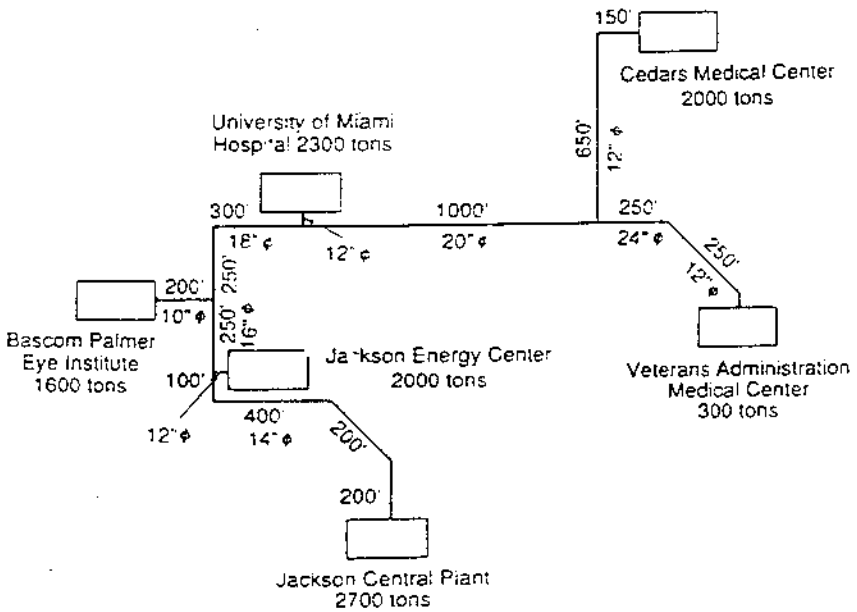

Miami district cooling piping network

12. Minneapolis, Minnesota, project

- **Project activities:** The University of Minnesota, Minneapolis Campus, has had a DHC system for approximately 60 years. The system supplies steam to over 17 million square feet of building area. There are approximately 5 miles of steam tunnels containing many distributions pipes. In 1983, a second plant, partially funded by DOE ($1.3 million in 1982), was put on the line. This plant enabled the University of Minnesota to install a Grid-Connected Integrated Community Energy System (GC-ICES), which generates 12.7 MW of electricity and supplies heat. Further planning was accomplished in 1988 when the University developed a Master Utility for the next 25 years. The plan calls for modernizing the system by shutting down the existing heating plants and replacing them with one new more efficient coal fired plant. The need for a new distribution system and a requirement for a central chilled water system for district cooling were identified.

- **Results achieved:**
  - Expanded use of the DHC system was made possible by DOE's partial funding of a second plant.
  - Modernization of the University of Minnesota DHC was enhanced by DOE participation.
  - The new chilled water system will use advanced fluid technologies, improved by DOE funded R&D.
  - The steam plants serve four institutions in Minneapolis: the University of Minnesota, Minneapolis Campus; Fairview Hospital; St. Mary's Hospital; and Augsberg College.

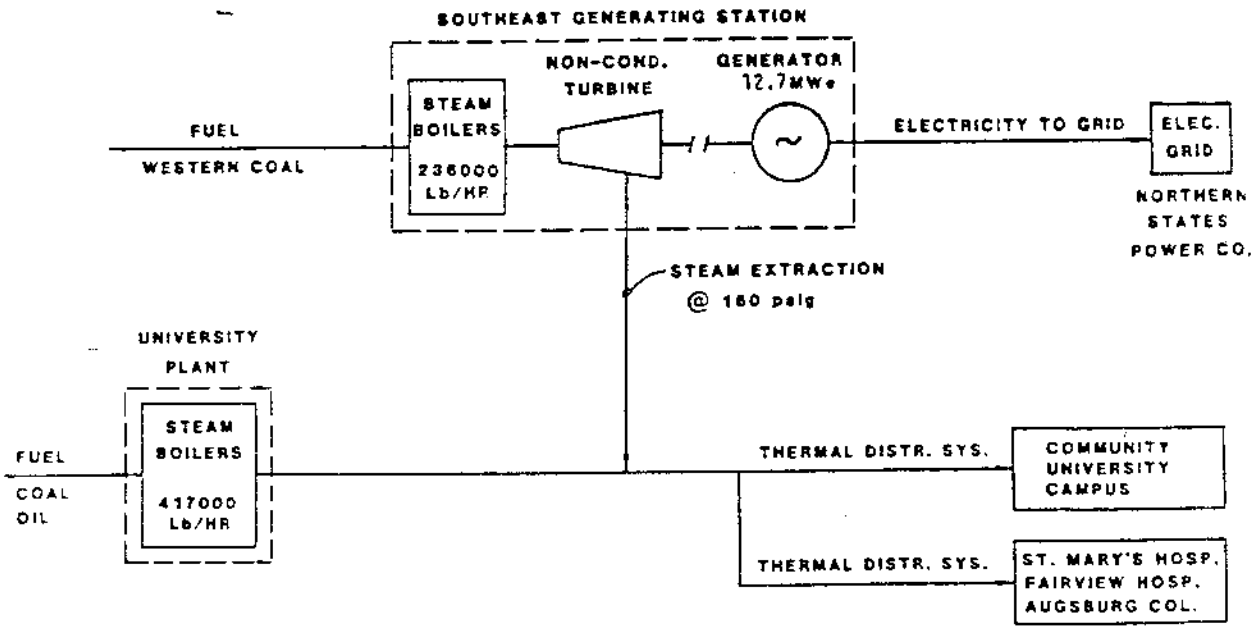

University of Minnesota District Heating/Cogeneration System (source: University of Minnesota)

13. New Haven, Connecticut, project

- **Project activities:** The objective of this project was to assess and implement advanced plant and system technologies such that they will be implemented and operated cost-effectively for United Resources Inc. (URI) and its customers. DOE funded approximately $70,000 of an estimated $4 million on this successful project. This project employs a satellite concept in DHC systems development, providing incremental growth of the entire district cooling system within medium-sized geographic areas being developed or renewed. As each satellite is developed, it is placed in parallel with previous district cooling geographic areas. In this manner, capital expenditures are controlled, current power available may be used, and thermal storage with proper demand control for the customer and the utility may be optimized.

- **Results achieved:** This effort emphasized advanced plant and system technologies powered by electricity, gas, oil, and renewable energy sources to provide cooling, thermal storage and distribution. Other efforts identified, quantified and configured district cooling systems and advanced technologies that have a realistic potential for implementation.

  - Various advanced and innovative district cooling technologies were evaluated.

  - Electric chillers combined with ice storage were the optimum choices of technologies for the downtown energy centers.

  - Two energy centers have been constructed in New Haven's central business district, with a total cooling capacity of 4,500 tons, and a customer load of approximately 2,770 tons.

  - The 1983 utility cost base rate for district heating thermal energy was $0.025 per kWh electrical equivalent, which was competitive with natural gas fueled electrical rates.

  - A 1989 progress report cost-shared by DOE includes analyses of alternate cooling technologies and thermal distribution systems, system development approaches, strategic development planning, energy and environmental considerations, customer and provider economics, and marketplace competition. This effort focused on the exploration of cooling technologies which are compatible with the satellite energy center approach. DOE contributed $58,000 of a total cost of $138,000 towards this report.

15. Ogden, Utah, project

- **Project activity:** The purpose of this DOE funded effort was to enable the city of Ogden to better manage its energy future. As part of the city's strategy, an Energy Task Force, established by the Ogden City Council, studied energy use in the community.

- **Results achieved:** DOE assisted the Ogden City Council in identifying improved DHC methodologies and technologies:

  - The Ogden City Council formally adopted a comprehensive energy plan that the Energy Task Force developed and made the plan part of the city's comprehensive plan.

  - They established a twelve member Energy Commission to work toward implementing the goals of the plan on a community wide basis.

  - Recently, Ogden City evaluated the potential thermal sources, including the existing municipal solid waste incinerator. Thermal requirements in the central business district and financial analyses are continuing.

16. Phoenix, Arizona, project

- **Project activity:** The city of Phoenix studied advanced district cooling technologies, such as ice slurries and friction reduction additives, under a cost sharing contract (DOE $60,000, city of Phoenix $5,000) awarded by DOE in the fall of 1988. The study was completed in the spring of 1990. The district cooling assessment involves a cluster of more than 14 buildings having an air-conditioned area of 190,000 square feet and a cooling load of 500 tons. The electrical costs for these building are over $1 million per year.

- **Results achieved:** The study accomplished the following:

  - Established that various advanced technologies could be used, such as cogeneration, absorption chilling, and advanced cooling distribution system concepts which DOE has under development.

  - Assessed the use of renewable energy, landfill gas, waste-to-energy, and sludge gas as cooling energy sources.

  - Determined that the project could be economical and feasible and could be implemented at that site and extended to other sites.

  As a result a detailed engineering and design study is underway, in evaluating ice slurries, friction reduction additives and other advanced technologies in the design of a system serving a complex of municipal buildings. DOE provided $80,000 for this study.

14. New Orleans, Louisiana, project

- **Project activities:** The purpose of this 1990 DOE partially funded study project was to investigate the economic and energy saving potential of ammonia refrigeration for district cooling, as opposed to equipment using CFC refrigerants. DOE provided $58,000 for the study with the city of New Orleans contributing $24,000. The study compares the capital and operating costs of a new central cooling plant, remote from the buildings cooled, with the energy costs of operating the present cooling systems. To offer a refrigeration machine that is safe to install inside a building, and is both low in capital cost and reasonably efficient, manufacturers have resorted to high speed centrifugal compressors to move the refrigerant. However, centrifugal compressors have very narrow requirements for refrigerants and depend on the particular CFC refrigerants slated for phase-out by the year 2000 or sooner. Therefore, ammonia refrigeration provides an option of a refrigerant that would be environmentally benign and also could be environmentally beneficial in its ability to clean up the upper atmosphere of CFC's.

- **Results achieved:** The study produced the following results:

  - The study prepared conceptual designs, capital cost estimates, and performance estimates for a new district cooling plant to serve the criminal court, traffic court, police complex, prisons, and municipal court buildings in New Orleans.

  - From preliminary engineering and cost studies that were performed to determine the expected cost of chilled water, the feasibility of extending service to other nearby loads was assessed.

  - Detailed cost studies were performed for a system sized to serve the base loads and additional nearby loads.

  - The project demonstrated the combination of ammonia refrigeration technology and cogeneration for district cooling.

  - The study established that ammonia refrigeration can be an energy efficient way to produce cooling, with little of the environmental problems of the CFC refrigerants, although codes typically restrict its use in buildings. However, similar code restrictions do not typically exist when ammonia is used in a central cooling plant.

  - Currently, a detailed engineering and design study is in progress, scheduled to be completed in September 1993. DOE has provided $173,000 for this project in a 25% federal cost-share grant.

17. Piqua, Ohio, project

Piqua, a moderate size town about 25 miles north of Dayton, Ohio, began developing its hot water district heating system in 1983. DOE provided funds for the feasibility study in 1982. Having evaluated the possibility of developing a coal-fired cogenerating hot water district heating system for the town and finding the system feasible but not affordable, Piqua scaled back its plans and sought a staged DHC development.

- **Project activities:** Piqua's municipal utility, which already operated a steam district heating system in Piqua's business district, developed a hot water heating system for an industrial park, developed around 1986. An electric power station supplied the heat for the system, after the utility had converted the power station back to burning coal and installed a 1 MW(e) back pressure turbine generator and heat exchangers. The first customers were developers of a hydroponic greenhouse with about 5 acres of roof areas and a hospital laundry. The greenhouse developers built the greenhouse while Piqua constructed the hot water district heating system. The initial peak load, for the greenhouse, was 2 MW(t). To allow for future growth, the distribution system and plant were sized for 13 MW(t). The first stage of construction cost $834,000, including the piping network and the power plant modifications. The second phase, which is mainly an extension of the first phase, cost approximately $1 million.

- **Results achieved:** The following has occurred:

  - Ohioponics, the greenhouse operators, calculated that a $25,000 annual reduction in their energy bill resulted from their use of the district heating system rather than natural gas.

  - The second phase of the system became operational in 1986.

  - The distribution network was expanded and improved.

  - The system now serves customers from a coal-fired plant that cogenerates heat and electric power.

  - The energy savings that the hot water district heating system brought was influential in decisions by tool and die industries to locate in the industrial park. Thus the hot water district heating system has been instrumental in encouraging growth in industry in Piqua.

  - A 30-MW(e) turbine generator is planned to provide baseload thermal and electric energy to the town.

18. Provo, Utah, project

- **Project activities:** In October 1983, in an effort funded by DOE, Provo engaged RDA Engineering Inc. to review a preliminary district heating study. At their regularly scheduled meeting in May 1984, the Provo City Power Board (PCPB) recommended, by resolution, to City Council, that the initial district heating system be constructed and ready for operation by Fall of 1985. In September, 1984, the Provo City Council unanimously approved the project and appropriated funds. Subsequently, all system components, including retrofit of the coal-fired power plant and installation of the hot water transmission system, were constructed.

- **Results achieved:** As a result of this study:
  - Development of the project was proposed, preliminary designs were completed, and a financial analysis of the City's initial district heating system was prepared.
  - Phase I of the DHC system was completed on time and within the allotted budget.
  - The initial system serves the Utah Valley Hospital, Provo City High School, Provo Recreation Center, a Seminary and other private users.
  - The system operates at temperatures below 210°F, thus enabling direct use and lowering customer retrofit costs.
  - The system is designed for expansion to Brigham Young University and to the central business district.

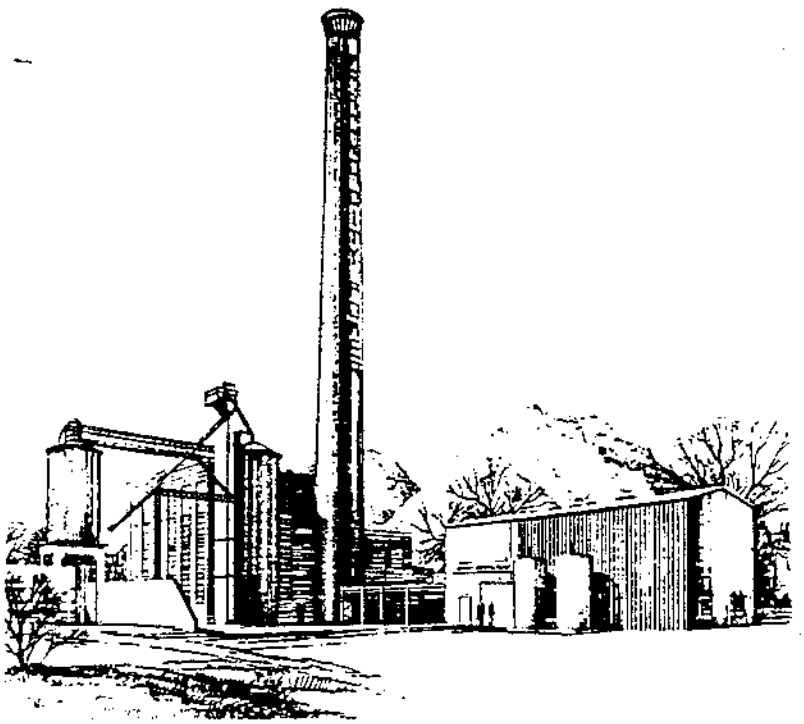

Provo, UT, project (source: RDA)

19. Saint Louis, Missouri, project

- **Project activities:** The city of St. Louis, under a contract with DOE awarded in 1988, conducted a two-phased analysis to determine the most practical method of developing a district chilled water system in downtown St. Louis. The chilled water system would use steam from a waste-to-energy plant. DOE contributed $32,000 out of $61,000 for this study.

- **Result achieved:** As a result of this study:

  - The city of St. Louis is constructing a 600 ton per day refuse incineration to energy facility on a site it purchased downtown.

  - The refuse incineration to energy facility will help solve the growing waste disposal problems in St. Louis, as well as produce steam from municipal trash.

  - The engineering required for the equipment system layout for the chilled water producing plant was performed under Phase I of the study.

  - The design provided for a 6,000- to 20,000-ton cooling system to be installed in the existing Ashley district steam boiler plant.

  - The chilled water system will use steam absorption units, steam turbine units, or a combination of the two. It will use the heat recovered from incineration at the downtown refuse incineration to energy facility.

  - Phase II of the project will consist of an in-depth comparison of the costs of owning and operating the large Ashley chilled water producing plant to those of owning and operating a similar, smaller satellite plant.

  - The satellite plant would have a capacity of 2,500 to 6,000 tons and would be located far from the Ashley plant.

  - The St. Louis Thermal Energy Corporation is now conducting a detailed district cooling engineering and design study. DOE has provided $100,000 for this project in a 25% federal cost share grant. The study is also evaluating the use of cogeneration.

20. Saint Paul, Minnesota, project

- **Project activities:** In October 1984, after several studies partially funded by DOE, St. Paul's nonprofit utility service, the District Heating Development Company, completed St. Paul's hot water district heating system, the largest and most ambitious of the time. DOE provided $1 million of the $3 million seed money, which was later supplemented by private funding. The total project cost an estimated $72 million. The Third Street Plant, a coal-burning 140-MW(t) steam plant previously owned by a steam district heating company, supplies heat to the system through steam to hot water heat exchangers. In addition, a 25-MW boiler at St. Paul Ramsey Medical Center and a 5-MW mobile boiler back up the system. At the customers' buildings, heat exchangers transfer the heat from the primary circulation system to closed secondary hot water loops. Pumps maintain the hot water at 175 psi with a flow of 700,000 gallons per hour. The hot water circulates at 250°F in the winter and at 180°F in the summer. Currently, St. Paul is constructing a district cooling system, with 30-inch pipes, in its downtown area. This project is scheduled to be completed in the spring of 1993 at an estimated cost of $8.8 million.

- **Results achieved:** St. Paul's hot water district heating system has been a success for both the engineers and the customers:
  - The District Heating Development Company completed the project in 1984, 1 year ahead of schedule. The system began serving 24 customers in 1983.
  - The system resulted in an annual energy savings equivalent to heating 10,000 single-family homes with oil and gas. Savings of 20%-45% occurred for downtown St. Paul.
  - The system used advanced distribution piping with total system losses of only 3%.
  - Air and water quality improved in the region.

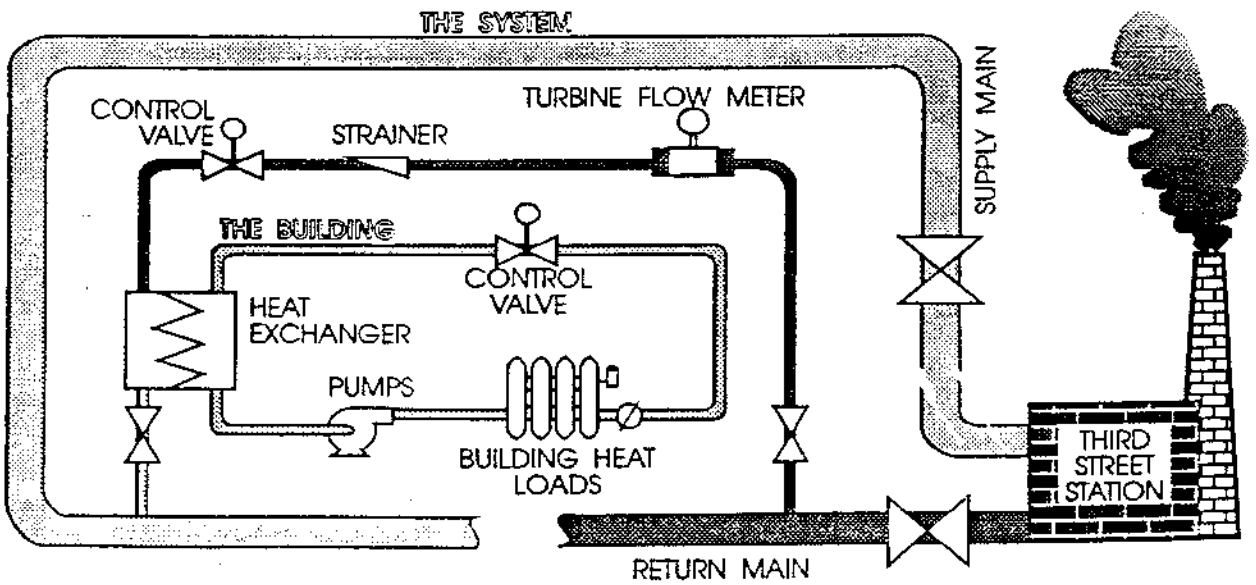

St. Paul's hot water district heating system (based on figure from District Heating Development Co. Inc.)

21. San Antonio, Texas, project

- **Project activities:** In 1985, DOE funded a project that evaluated and identified potential benefits of central energy systems and identified additional DHC sites. San Antonio already had two municipally owned and several privately DHC systems, including a private system serving three hospitals and a system operated by the San Antonio International Airport serving over 1.5 million square feet of building area. Specifically, the study evaluated DHC as incentives for private development, for integrating with other public development and promoting economic development within one or more specifically targeted areas within San Antonio. This process required the identification of long-range planning criteria that affected the city's decision to develop a DHC system. Computer-aided energy predesign analysis programs, the Central Energy System Analysis Program (CESAP) and the Predesign Energy Program (PREP), were used to assess the costs of a DHC system versus those of individual building systems.

- **Results achieved:** As a result of this study:
  - A preliminary analysis of the costs for a DHC system was performed.
  - A DHC guide for local governments and developers, including an overview on DHC advantages and disadvantages, was developed. The guide provided the economic cost characteristics of various options for DHC systems.
  - The planning steps for developing DHC systems were defined. The study identified steps for regulatory factors in the development and operation of a DHC system, and the incentive for public and private promotion, development and financing.
  - Sites were identified for potential DHC system development.

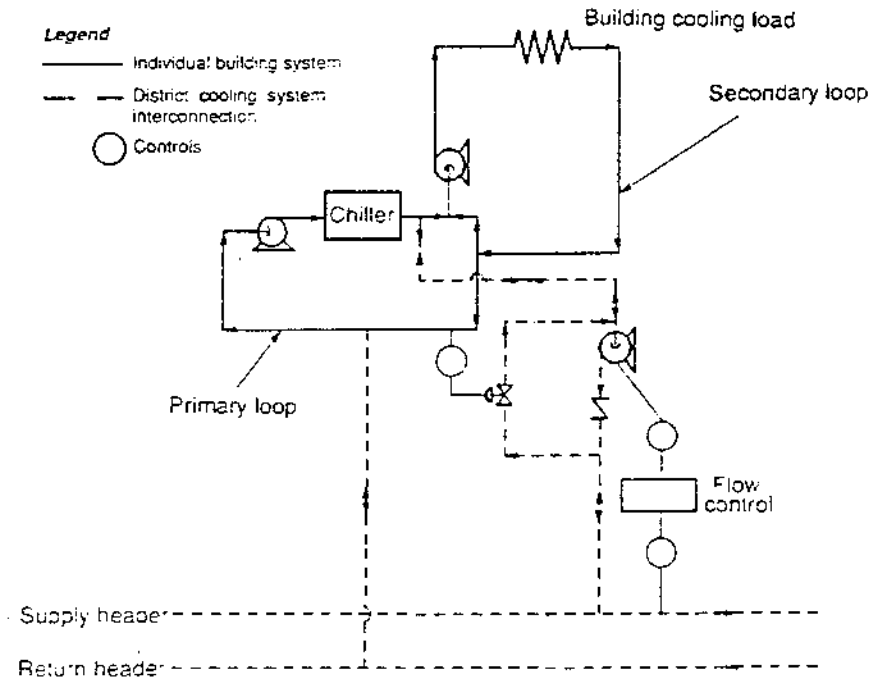

Typical cooling system piping arrangement in mechanical room

22. San Francisco, California, Mission Bay project

- Project activities: The Mission Bay project is one of the largest urban redevelopment projects in the United States. A 300-acre site will ultimately support a new, high density, mixed use community containing as many as 8000 new housing units and 6.8 million square feet of commercial space. In 1987, the City's Public Utilities Commission, Bureau of Energy Conservation prepared energy design recommendations for the Mission Bay project. These recommendations became known as the Energy Plan for Mission Bay.

- **Results Achieved:** The Energy Plan for Mission Bay stated the following:

  - That district heating and cooling be carefully examined for its energy efficiency and economic development of the Mission Bay community.

  - That the findings of both the work on district cooling funded by DOE, and on the studies of district heating funded by Pacific Gas and Electric Company be combined and reported to provide a comprehensive feasibility study for the Mission Bay development.

  - That a plan be established to examine the viability of a DHC system for Phase I and II of Mission Bay's planned construction while allowing for future phased expansion to the remainder of the Mission Bay development.

  - The preliminary studies showed that in the office building and hotel portions of Mission Bay alone, savings of over $1.5 million per year in cooling costs are possible.

  - According to Pacific Gas and Electric's preliminary feasibility study, the use of district cooling makes possible $800,000 per year savings, because of the increased availability of the commercial space.

  - As indicated by Pacific Gas and Electric's report, the use of advanced production, thermal storage, and distribution technologies would significantly reduce peak load demands on their electric system.

As a result, in 1989, the City of San Francisco and Pacific Gas and Electric selected an engineering firm to conduct a detailed economic and technical assessment of district heating and cooling at Mission Bay. DOE provided $53,000 out of a total cost of $123,000 of the funding for this assessment.

23. Stamford, Connecticut, project

- **Project activities:** This 1990 DOE cost-shared study examined the feasibility of introducing district heating and cooling for a selected neighborhood of downtown Stamford, CT. DOE provided $50,000, Northeast Utilities contributed $45,000 and the Stamford Partnership provided $10,000 for this study. The study investigated implementation of a district energy system in conjunction with advanced cooling technologies to compete with conventional alternatives (which provide heating and cooling for buildings with on-site energy plants) as a means to encourage energy conservation and economic development.

- **Results achieved:** The feasibility study was carried out by Joseph Technologies Inc. and it was useful in that:

  - The project served Stamford as a pilot program to demonstrate the inherent flexibility of district heating and cooling.

  - It developed incentive rewards for expanding the DHC system when further innovations and technology options become attractive.

  - It investigated possible modifications to selected technologies to implement a technically and economically feasible district cooling system in the community.

  - It provided a comparison of various technological alternatives available for district cooling energy production. Some of the alternatives that were compared included: advanced two-stage absorption chillers, steam driven chillers with piggy-back absorption chillers, high efficiency electric chillers, combination of electric and absorption chillers and turbo-ice harvesting.

  - It assessed various innovative district cooling transmission technologies such as ice storage, chilled water storage, and ice water slurries.

  - The Stamford Partnership is now conducting a detailed engineering and design study for a district cooling system. The study will evaluate expanding an existing chiller plant in a hospital to serve a new system that will include other commercial and residential buildings. DOE has provided $80,000 for this project in a 25% federal cost share grant.

24. Trenton, New Jersey, project

The Trenton government has begun a series of rebuilding and economic development programs to counter the urban decline that has inflicted the city. Trenton's district heating program, developed and operated by the Trenton District Energy Company (TDEC), is one such program.

- **Program activities:** Development of the district heating system began with investigations into the concept and local, state, and federal institutional negotiations. The mayor played a key role in gaining support for the project. The district heating system began service in December 1983, with a total project cost of $40 million. DOE provided $370,000 for feasibility studies and some funding for monitoring the completed project. Most of the financing, which included a $14 million bond issue, was private. A closed-loop hot water system, operating at 250°F, 320°F, and 400°F, heats the customers's buildings. Most of the heat for the system comes from the diesel engines that drive two electric generators. The entire net electric output of the central plant is wholesaled to the local electric utility. Boilers that burn either natural gas or low sulfur oil supplement the heat supply. Heat flows through heat exchangers into the customers' system. In some buildings, the heated hot water in the customers' system is flashed into steam for the steam system. This arrangement has allowed these buildings to use the previously existing steam system. The district heating system serves 73 buildings including the State Capitol Complex, the State Prison, various state office buildings, the county courthouse and jail, several apartment houses and a school. The facility can provide thermal energy for an estimated 6 million square feet of building area. The farthest building is about two miles from the central plant. By design, the distribution system allows for future expansion. In 1985, TDEC made new connections to several buildings with over a mile of additional distribution lines.

- **Results achieved:** An integrated community energy system has been completed, which has stimulated the revitalization of the central business district of Trenton:
  - Thermal users save 10 to 15 percent of their heating costs over 20 years.
  - The state of New Jersey estimates saving about $11 million over the next 20 years, by buying hot water from the system.
  - A savings of approximately 5 million gallons of fuel consumption per year is estimated.
  - The connection of existing building heating systems to the district heating system by heat exchangers has minimized the need for modifying the building systems.
  - The DHC system has eliminated replacing or servicing old boilers in individual buildings.
  - The architectural character of the plant is aesthetically pleasing by being clearly commercial/residential, not industrial.

25. Waikiki, Hawaii, district cooling project

- **Project activities:** In a study funded by DOE at a cost of $50,000, Darrow-Sawyer and Associates Inc. assessed the feasibility of using the cold seawater from 1680 feet below the ocean surface 3 miles offshore the island Oahu as the cooling medium in a district cooling system in Waikiki. At 45°F, significantly cooler than the 73°F surface water at the Oahu shore, this seawater promises considerable savings of the cooling power used for air conditioning in Waikiki. In the proposed project, a 42-inch ocean intake pipe would be laid 3 miles offshore, 1680 feet beneath the ocean surface. Pumps would move the seawater to, and through, a bank of titanium plate heat exchangers, to cool the fresh water in the district cooling distribution system. The cooled fresh water would circulate through the district cooling system to users in Waikiki, primarily hotels, condominiums, and large office buildings. A second pipe would return the warmed seawater to the ocean at about 1 mile offshore. The overall cooling load for the targeted area is in excess of 24,000 tons. In addition to completing the technical side of the investigation, the researchers sought potential investors to finance and become partners in the project and sought governmental and institutional liaisons.

- **Results achieved:** In completing the study and preparing the final report, the investigators have:

  - Determined, from underwater pipeline investigations, pipe routings and intake and outlet terminal locations.

  - Conducted a civil engineering investigation of the district cooling utility piping.

  - Gathered mechanical connection and metering information pertaining to utility entry to major users' equipment.

  - Determined that the large population and high cooling load in Waikiki make it ideal for this project. (Forty eight percent of the electrical power consumption is used for air conditioning.) It was found that the system could save over 50 MW of electric power generating capacity, which is currently used to power air conditioning equipment.

  - The estimated cost of the 3-mile undersea cold water intake pipeline was about $9.5 million.

  - It was calculated that if the project would save 75% of the electric power currently used for air conditioning, savings could amount to about $2 million per month.

26. Other projects

The projects listed previously are representative of many DHC accomplishments influenced by DOE. During the period from 1982 to the present, at least 64 cities have carried out feasibility assessments funded, at least in part, by DOE. Out of the 64 cities, 15 cities have proceeded with detailed DHC system design efforts. Seven of these cites; Baltimore, MD; Camden, NJ; Des Moines, IH; Grand Rapids (Kent County), MI; New Haven, CT; Provo, UT; and St. Paul, MN; have been discussed previously. The remaining are:

Galax, Virginia
Kansas City, Missouri
Lawrence, Massachusetts
Lincoln, Nebraska
Olympia, Washington
San Jose, California
Syracuse, New York
Tacoma, Washington

From the above, it is interesting to note the geographical diversity of interest and applicability of DHC. Also, design studies, influenced by DOE funding, have resulted in a relatively high percentage of DHC system additions or new systems built. For instance, of the 15 cities listed above that have proceeded with detailed DHC design efforts, 8 cities have built or added on to DHC systems:

Baltimore, Maryland
Galax, Virginia
Grand Rapids (Kent County), Michigan
Kansas City, Missouri
Lawrence, Massachusetts
New Haven, Connecticut
Provo, Utah
St. Paul, Minnesota

In 1988, as a result of program solicitation by DOE, 10 cost sharing contracts were awarded for district cooling feasibility studies. Final reports were issued in 1990. These projects have been covered previously:

Baltimore, Maryland
New Haven, Connecticut
New Orleans, Louisiana
Phoenix, Arizona
St. Louis, Missouri
San Francisco, California
Stamford, Connecticut
Little Rock, Arkansas
Miami, Florida
Waikiki district cooling utility at Honolulu, Hawaii

(2) Technology exchange

DOE's technology exchange activities include conferences, symposia, and technology transfer programs. This section discusses some examples.

International Symposium on District Heating and Cooling:

In 1984, The DOE, National Academy of Science and other agencies conducted an International Symposium on DHC:

- **Project activities:** Papers were presented on various DHC systems, indicating the attributes that give DHC systems an advantage over competing energy systems, under certain conditions. By replacing many individual boilers with one central heating and cooling source, DHC systems can increase effective building space, reduce annual average building construction and operating costs, and contribute to improving air quality. DHC systems discussed increase energy efficiency.

- **Results achieved:** In 1985, the National Research Council prepared a study on District Heating and Cooling, Prospects and Issues. The report included the following:

  - Analysis of papers submitted and discussions held at the 1984 International Symposium on District Heating and Cooling.
  - Examination of the extent to which DHC technology had been transferred from the DOE and other federal departments to the private sector.

Conference of Mayors Research and Education Foundation (COMREF).

In 1988, DOE funded a district heating and cooling technology transfer program with the Conference of Mayors Research and Education Foundation (COMREF):

- **Project activities:** The purpose of this program was to transfer information and technology, from cities developing or operating DHC systems, to those contemplating or starting development. Initially, two main activities were proposed by COMREF and accepted by DOE: (1) a survey of operating DHC systems, and report on the findings; and (2) development of a peer-matching program involving local officials and others.

- **Results achieved:** Before the program proposal was approved by DOE, COMREF received support from another, non-DOE source to conduct a survey similar to the one that had been proposed.

  - Commencement of work on the project was delayed while the scope of work was modified.
  - The survey was replaced by a study that described state programs that assist localities in developing DHC. A report was published on December 1988.

National Conference on Community Energy Systems and Economic Development

This annual conference was jointly sponsored by DOE/HUD for seven years, starting in 1982 with a different theme each year.

- **Project activities:** The purpose of these conferences was to transfer information concerning community energy systems and their relationship with economic development, environmental benefits, the role of developers, and the leadership of local officials.

- **Results achieved:** These conferences demonstrated that:

  - DHC is a key ingredient of a community energy system.

  - Local government and private partnerships can be effective in dealing with community development.

  - The development of DHC makes it possible for communities to provide reliable, low cost thermal energy.

  - Environmentally conscious choices in community energy development make DHC a competitive energy system.

Ice Slurry District Cooling Development Workshop

In May 1992, Northern States Power sponsored and hosted a workshop on ice slurry district cooling. The workshop was cosponsored by DOE, EPRI, University of Minnesota, and the University of Wisconsin-Madison.

- **Project activities:** The purpose of the workshop was to review the status of ice slurry district cooling development, and to solicit utilities and firms interested in district cooling to join a field-testing project proposed for Minneapolis, Minnesota. The workshop was conducted for electric utilities, research and development engineers, manufacturers, and interested cosponsors of a district cooling project with ice storage.

- **Results achieved:** The workshop allowed expansion of the scope and research activities of the Minneapolis project. The workshop was helpful in:

  - Determining the needs of utilities that do not operate district heating or cooling systems.

  - Determining the needs of utilities that will be assisting customers, such as universities, to develop district cooling plants.

(3) Collaborative demonstration program

Argonne National Laboratory (ANL) has established a collaborative program to further develop advanced fluid district cooling system technology and is conducting this program with Northern States Power (NSP) and the Electric Power Research Institute (EPRI) at NSP's utility site. DOE is providing approximately 50% of the required funding, and the private sector is providing the other half. Improving cooling system technology is a targeted research area for both DOE and EPRI. This work is directed at improving the thermal/hydraulic performance of chilled water cooling systems and utility load management. The program will focus and culminate past efforts by testing a complete ice slurry distributed-load network cooling system in the field, with the involvement of equipment makers, engineers, and end users.

- **Project activity:** This program began in 1991 and will last 4 to 5 years. In the first year, a suitable ice machine has been identified, modified, and tested at ANL, and a method was developed for controlling slurry delivery to users. Also, NSP, EPRI, and ANL have initiated detailed design of a field system. In parallel, an advanced concept ice slush generator is being developed under EPRI sponsorship to efficiently generate ice slushes that can be stored for utility load management. In the first summer of field testing, the system will be installed, and testing will start at NSP's site. The slurry will be used only within the NSP service center. In the second summer, piping will be installed to deliver slurry to a U.S. Post Office and a medical center. Then the total system will be tested. In the third summer, additional hardware, such as other ice makers and pumps, will be tested to optimize system performance. In the last year of this program, a design guide will be developed for use of the demonstrated technology. Also, in the final year, ANL and NSP will develop a large-scale district cooling system for implementation by the private sector in the Minneapolis area. Upon completion of this program, the technology will be transferred to the private sector.

- **Project goals:** This program is expected to:

  - Discover a method for:

    (a) Obtaining a pumpable slurry with proper crystal size and other desirable characteristics, from a storage tank.

    (b) Dividing a slurry flow in a pipe into two or more flows without the pipe plugging.

    (c) Measuring the energy expended for each user.

  - Determine the optimum falling-film binary solution composition that maximizes heat transfer and minimizes ice adhesion.

  - Develop the ice slush storage tank design that maximizes efficient cooling extraction and minimizes such performance-degrading phenomena as ice crystal agglomeration.

- Formulate slurry system operation and control policy regarding optimal cooling and load management.

- Determine slurry-pipe flow pressure drop and heat transfer as related to pipe size, crystal size, loading fraction, carrier liquid type, and flow rate.

- **Results achieved:** So far, the work has shown that:

  - Pumpable phase-change slurries (in this particular case, an ice slush slurry) can replace chilled water as the circulating fluid in district cooling systems.

  - Energy transport fluids of a higher energy can be pumped from a central ice slush generator to distributed loads.

  - The distributed loads can use ice storage to shift peak electrical demand.

  - Piping and storage tank sizes can be greatly reduced. Because of the low temperature of the slurry, duct and fan sizes can be reduced.

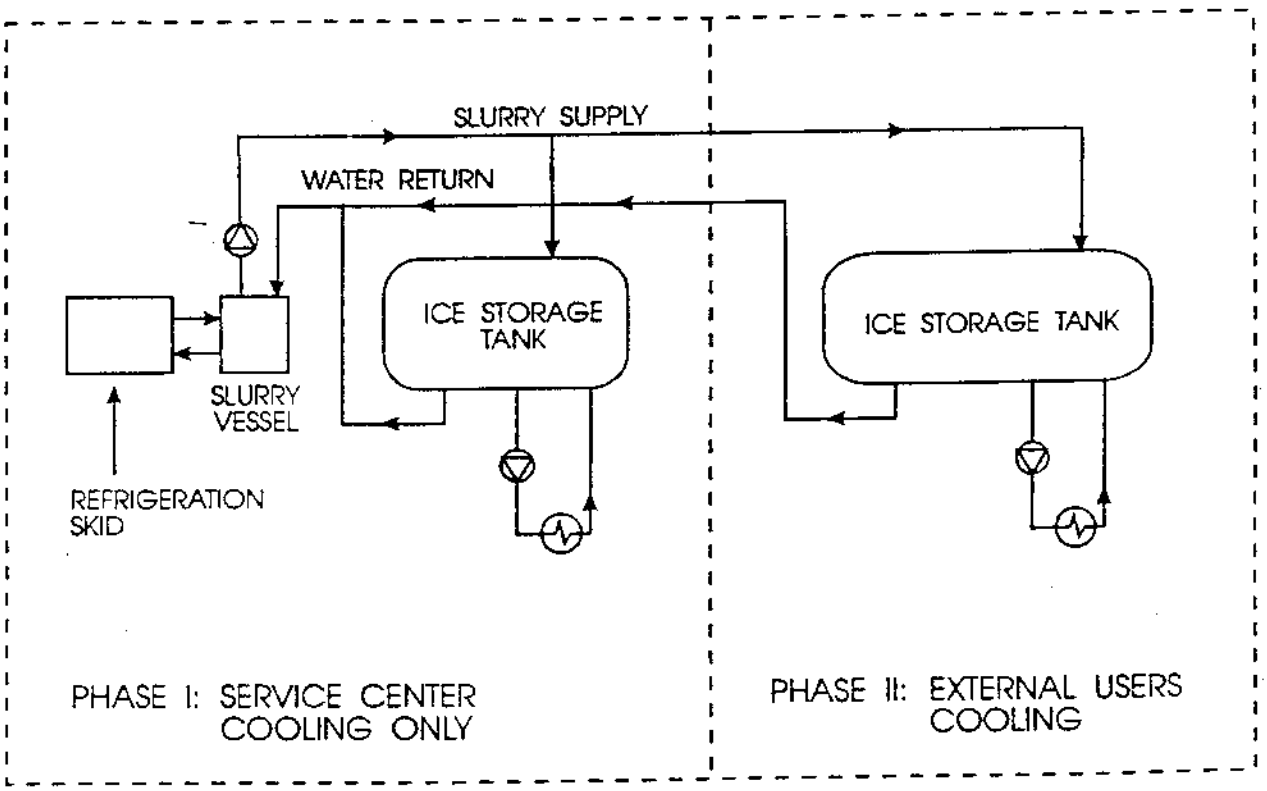

Ice slurry cooling at NSP North Service Center
(source: Argonne National Laboratory)

(4) Current projects

(a) District cooling detailed engineering and design studies

Currently, there are eight cities progressing with detailed engineering and design studies of district cooling systems, funded by DOE grants. These grants, which could not exceed 25% of the cost of each project, totaled $803,520. Before proceeding with the detailed engineering and design studies, these cities conducted feasibility studies for district heating and/or cooling with funding from DOE. A brief description of the detailed engineering and design studies follows:

Baltimore, MD (University of Maryland): Consolidating several existing cooling systems in individual buildings into a district system with high-efficiency chiller; possible use of thermal storage.

Lansing, MI (Board of Water and Light): Developing a downtown system; evaluating friction reduction additives; using low-temperature water, ice slurries, and distributed thermal storage.

Lincoln, NE (District Energy Corporation of Lincoln and Lancaster County): Developing a system with a central plant using heat pumps with water-chilling and ice-making capability; use of ice storage.

Miami, FL (Joseph Technology Corporation): Interconnecting hospitals in the Civic Center Complex of Dade County; considering a cooperative for system ownership and operation.

City of New Orleans, LA: Using ammonia refrigerant in a central cooling plant for the Judicial Complex; distributing low-temperature water in a new district cooling system.

City of Phoenix, AZ: Evaluating ice slurries, friction-reduction additives, and other advanced technologies in the design of a district cooling system serving a complex of municipal buildings.

St. Louis, MO (St. Louis Thermal Energy Corporation): Developing a downtown district cooling system; using cogeneration in an existing power plant; using refuse-derived fuel.

Stamford, CT (The Stamford Partnership): Expanding an existing chiller plant in a hospital to serve a new district cooling system that includes other commercial and residential buildings.

. National Action Plan

A. DHC/C Planning Committee

In the spring of 1991, the Utility Systems Division of DOE Headquarters, with support from the Oak Ridge National Laboratory, formed a thirteen member Planning Committee representative of the DHC/C diverse community activities. The committee decided that an invitation-only workshop was needed to develop an Action Plan that could realistically expand DHC/C's strength and presence in the U.S.

B. DHC/C fall workshop

By late summer, the committee had conducted the strategic planning, defined a preliminary list of DHC/C strengths and weaknesses, and suggested key issues as a focus for a workshop planned for the fall. The committee recommended a two-day event (October 29-30, 1991, Alexandria, Virginia) limited to about 60 invited participants that represented industry, government, non-profit organizations and academia. The committee nominated an initial candidate list, and emphasized the need for a visionary and highly influential keynote speaker. Mr. Eugene McGrath, Chairman and Chief Executive Officer of Consolidated Edison Company, opened the workshop by suggesting that DHC/C be made an important part of our energy strategy by capitalizing on opportunities developed by the DHC/C industry. Dr. Fred Strnisa, from the New York State Energy Research and Development Authority, chaired the workshop. Planning Committee members agreed to lead the working group sessions. The workshop focused on four issues: policy, value, modernization, and marketing. Participants confirmed problems associated with each issue and identified ways to address them. They initially generated over 100 possible goals, then narrowed this universe to nineteen high priority items. Initial strategies outlined steps and schedules to reach each goal. For most of these strategies, cost estimates and potential fund sources were identified. Both personal and institutional commitments were made to begin implementation of actions outlined during the workshop. Representatives of the International District Heating and Cooling Association (IDHCA) expressed their desire to provide the "umbrella organization" and leadership required to implement an Action Plan needed to meet the goals established by the workshop participants. At their annual conference in June 1992, the IDHCA Board formally endorsed the DHC/C National Action Plan, with the mission to make DHC/C a major contributor to the energy security, environmental quality, and economy of the U.S. within the next decade. The major elements of the entire Action Plan are summarized in the next page.

C. Goals, strategies and actions

The fall working group established the following goals, strategies, and actions:

1. **A credible basic foundation.**
   - Understand the DHC/C industry.
     - Characterize the DHC/C community.
     - Quantify its installed base.
     - Assess its potential market.
   - Quantify societal benefits (Energy, Environment, and Economy).
     - Describe external benefits.
     - Select qualification methods.
     - Quantify the external benefits.
   - Provide comparative cost guidelines.
     - Identify cost components.
     - Develop comparative cost guidelines.
     - Incorporate external benefits.

2. **A strong competitive position.**
   - Improve customer orientation.
     - Understand customer needs.
     - Indicate customer advantages.
     - Modify marketing approaches.
   - Strengthen industry capacity.
     - Establish strategic alliances.
     - Enhance government partnerships.
     - Expand professional resources and training.
     - Encourage intra-industry competition.
   - Pursue innovation and quality service.
     - Identify technology needs and opportunities.
     - Conduct R&D and focused demonstrations.
     - Establish essential technical standards.
     - Provide high quality technical support.

3. **An effective National presence.**
   - Strengthen DHC/C voice.
     - Describe an umbrella organization.
     - Confirm its mission and management.
     - Hire full-time director and staff.
     - Ensure continuity and growth.
   - Build public awareness.
     - Identify target audiences and message.
     - Develop outreach and education strategy.
     - Implement, expand and continue.
   - Influence decision-makers.
     - Indicate key decision-makers & organizations.
     - Develop outreach and lobbying strategy.
     - Create champions and supportive coalitions.

4. **Fair policies and regulations.**
   - Ensure fair policies and legislation.
     - Identify critical policy & legislative issues.
     - Identify priorities for action.
     - Change and/or establish new policies.
   - Ensure equitable financial treatment.
     - Identify tax inequities and financial barriers.
     - Identify priorities for action.
     - Change and/or establish new instruments.
   - Ensure equitable regulatory treatment.
     - Identify critical regulatory obstacles.
     - Identify priorities for action.
     - Change and/or establish new measures.